1800 Series
Conventional Pressure Transmitters

The **1800 Series pressure transmitters** are well suited for intrinsically safe applications or conventional transmitter installations where a compact footprint is impractical. The 1800 Series transmitters utilize an advanced monosilicon pressure sensor and incorporate a patented encapsulation technology to achieve exceptional mechanical and thermal isolation.

All 1800 Series transmitters include external push-buttons for device setup and calibration. If ordered with HART® output they can also be programmed with a HART® communicator. Additionally, they are available with 2, 3, or 5-valve manifolds. With a standard ±0.075% accuracy, the SOR 1800 Series conventional transmitters are an exceptional solution for continuous pressure monitoring.

Features

- Gauge Pressure Ranges
  -40 kPa to 40 kPa through -100 kPa to 40 MPa
  -5.8 to 5.8 psi through -14.5 to 5,801 psi
- Differential Pressure Ranges
  -6 kPa to 6 kPa through -500 kPa to 10 MPa
  -0.87 to 0.87 psid through -72.5 to 1,450 psid
- 4-20 mA output with optional HART® communication protocol
- ±0.075% accuracy (URL)
- Aluminum explosion proof housing
- Standard push-buttons for setup
- Optional integral LCD display
- EMC (EMI/RFI) protection
- ATEX / IECEx certified for intrinsically safe and flameproof applications
- 2 year warranty

DMP305X-**TST-S**
Standard Over Pressure

DMP305X-**TST-H**
High Over Pressure

DMP305X-**DST-S**
Differential Pressure

ת.ד. 36773 תל–אביב 61367 טל' 03–6883244 פקס 03-5376157
P.O.B. 36773 TEL-AVIV 61367 ISRAEL TEL. 972-3-6883244 FAX 972-3-5376157
E-MAIL unitedin@netvision.net.il דואר אלקטרוני INTERNET www.united.co.il אתר אינטרנט

Product Specifications - DMP305X-TST-S

Output	4-20mA
	HART® (Optional)
Turndown	
-40 kPa to 40 kPa thru -100 kPa to 10 MPa	20:1
-100 kPa to 40 MPa	8:1
Accuracy	±0.075% URL (BFSL)
	(Linearity, Hysterisis and Repeatability)
TD = Turndown	TD ≤ 10 ± 0.1% URL
TD = URL / |URV - LRV|	10 < TD ≤ 20 ± 0.01% URL
URL = Upper Range Limit	
URV/LRV = Upper/Lower Range Value	
Temperature Effect	±(0.1 + 0.15*TD)% URL
	@ -20 to 80°C
Temperature Range	
Compensated	-20 to 80°C
Ambient (Limited by both Approvals and Display)	
No Approvals or Display	-40 to 85°C
With Integral LCD Display (No Approvals)	-20 to 70°C
Intrinsically Safe	-40 to 60°C
Flameproof	-25 to 60°C
Process	
Silicone Oil Fill Fluid	-20 to 85°C
Fluorocarbon Oil Fill Fluid	-10 to 80°C
Flameproof	Limits Max Temperature to 80°C
Storage	
No Display	-40 to 110°C
With Integral LCD Display	-40 to 85°C

Long Term Stability	≤ ±0.2% URL per 5 years
Response Time	≤ 200 ms
Damping Time	0-100 s (Configurable)
Startup Time	< 6 s
Supply Voltage	10.5-55VDC
HART® with 250 ohm load	16.5-55VDC
Loop Resistance	0-2119 ohms
HART® Protocol	250-600 ohms
Circuit Protection	Reverse Polarity and
	EMC (EMI/RFI) protected
Power Consumption	≤ 500mW @ 24VDC, 20.8mA
Power Supply Effects	< ±0.005% URL/V
Mounting Position Effect	< 400 Pa
	Can be corrected by re-zeroing
Vibration Effect	< 0.1% URL
	GB/T 1827.3/IEC61928-3 tests
Relative Humidity	5-100% R.H. @ 40°C
Construction	Aluminum Ex-Pf Housing
IP Rating	IP67
Over Pressure	
S403G -40 kPa to 40 kPa	1 MPa
S254G -100 kPa to 250 kPa	4 MPa
S105G -100 kPa to 1 MPa	6 MPa
S305G -100 kPa to 3 MPa	15 MPa
S106G -100 kPa to 10 MPa	20 MPa
S406G -100 kPa to 40 MPa	80 MPa
Weight (No Adapters or Brackets)	1.56 kg
Warranty	2 years

Design and specifications are subject to change without notice. For latest revision, see SORInc.com.

ת.ד. 36773 תל–אביב 61367 טל' 03–6883244 פקס 03-5376157
P.O.B. 36773 TEL-AVIV 61367 ISRAEL TEL. 972-3-6883244 FAX 972-3-5376157
E-MAIL unitedin@netvision.net.il דואר אלקטרוני INTERNET www.united.co.il אתר אינטרנט

How to Order

Below is the SOR quick select model number tree that provides you with all the options to configure and order a product for your application.

- You must select a designator for each component
- Reference tables, charts and additional information are provided throughout the catalog to help you make your selections, see pages noted in the tree.

1 Model

Standard Over Pressure Transmitter — DMP305X-TST

2 Range

-40 kPa to 40 kPa	S403G
-100 kPa to 250 kPa	S254G
-100 kPa to 1 MPa	S105G
-100 kPa to 3 MPa	S305G
-100 kPa to 10 MPa	S106G
-100 kPa to 40 MPa	S406G

3 Diaphragm Material

316LSS — S

4 Fill Fluid

Silicone Oil	S
Fluorocarbon Oil	D

5 Sensor Seal

FKM O-Ring — S

6 Housing

Aluminum-Alloy Enclosure with 2 M20 x 1.5(F) Conduit Connections — T2

7 Conduit Connection

Weatherproof PVC Adapter - M20 x 1.5(F) & Blind Plug	R1
Flameproof SS Adapter - 1/2" NPT(F) & Blind Plug	R2
Flameproof SS Adapter - M20 x 1.5(F) & Blind Plug	R3

8 Protocol/Output

F	4-20 mA
H	4-20 mA and HART®

9 Display

A	No Display*
C	Integral LCD Display*

*All units include external push-button programming as standard option. LCD display adds internal push-buttons.

10 Process Connection Material

4	304SS
6	316SS

11 Process Connection Size

M01	M20 x 1.5(F)
G01	G1/2(M)
G02	G1/4(M)
G08	G1/4(M) with Back-End Seal
R01	1/2" NPT(M)
R02	1/4" NPT(M)
R03	1/2" NPT(F)
R04	1/4" NPT(F)

See page 26 for dimensions

12 Accessories

See page 27 for selection

DMP305X-TST	-		S		S	-	T2		-			-			
DMP305X-TST-		S105G	S	S	S	-	T2	R2	-	H	C	-	6	R01	/E1/I1

Example Model No.

ת.ד. 36773 תל–אביב 61367 טל' 03–6883244 פקס 03-5376157
P.O.B. 36773 TEL-AVIV 61367 ISRAEL TEL. 972-3-6883244 FAX 972-3-5376157
E-MAIL unitedin@netvision.net.il דואר אלקטרוני INTERNET www.united.co.il אתר אינטרנט

Dimensions shown are for reference only.
Dimensions = mm

With Integral LCD Display (option C)

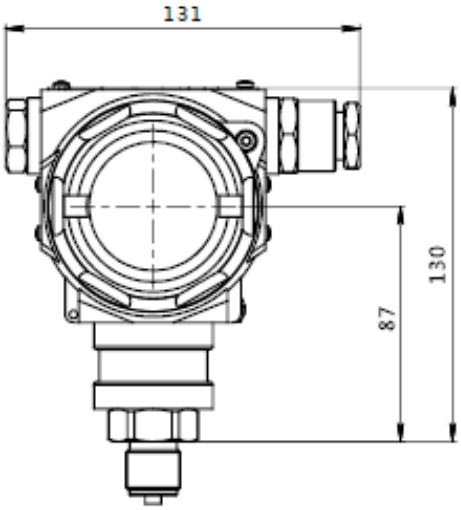

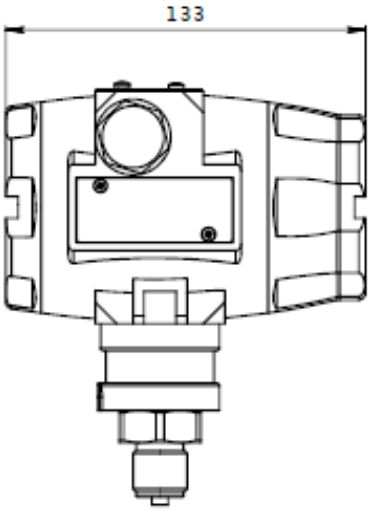

Without Display (option A)

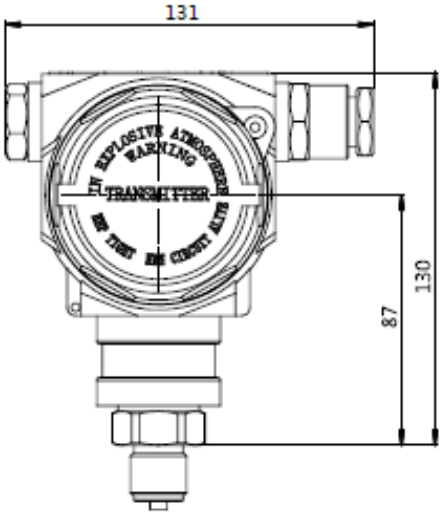

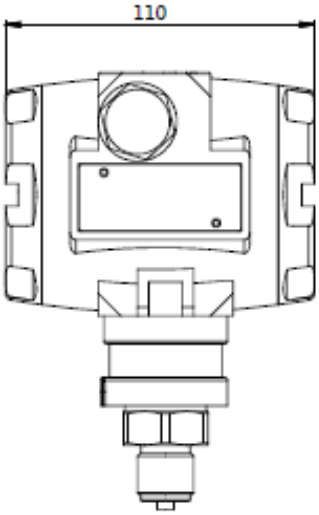

Design and specifications are subject to change without notice. For latest revision, see SORInc.com.

ת.ד. 36773 תל–אביב 61367 טל' 03–6883244 פקס 03-5376157
P.O.B. 36773 TEL-AVIV 61367 ISRAEL TEL. 972-3-6883244 FAX 972-3-5376157
E-MAIL unitedin@netvision.net.il דואר אלקטרוני INTERNET www.united.co.il אתר אינטרנט

ת.ד. 36773 תל–אביב 61367 טל' 03–6883244 פקס 03-5376157
P.O.B. 36773 TEL-AVIV 61367 ISRAEL TEL. 972-3-6883244 FAX 972-3-5376157
E-MAIL unitedin@netvision.net.il דואר אלקטרוני INTERNET www.united.co.il אתר אינטרנט