FLUID COMPONENTS INTERNATIONAL LLC

Installation, Operation & Maintenance Manual

Installation, Betrieb und Wartungshandbuch

Manual de Instalación, Operación y Mantenimento

安装、操作和维护手册

ST100 Series
Thermal Mass Flow Meter

Table of Contents

1 GENERAL

Product Description

The ST100 Series is a thermal dispersion, industrial process grade air/gas flow meter. It is suitable for all air and gas flow measurement applications in line sizes from 1" to 100" [25 to 2500 mm] and larger. The instrument provides direct mass flow measuring and measures flow rate, totalized flow and temperature, and the STP versions add pressure measurement.

The measurements are made available to the user by way of 4-20mA analog output channels with HART or pre-selected digital bus protocols. The optional graphics display provides real-time process variable values along with flow range and process description information.

There are no moving parts to clean or maintain. It is offered in a wide selection of process connections to fit with any process piping and versions are available for temperature service from -40°F [-40°C] to 850°F [454°C].

ST100's electronics/transmitter can be integrally mounted with the flow sensor or remote mounted up to 1000' [300m] from the sensor element. Additional patented and/or FCI exclusive features include VeriCal® in-situ calibration verification, SpectraCalTM user selectable gas mixes, Dual sensor/single transmitter models and a built-in data logger capable of storing more than 20M readings. All ST100's are precision calibrated in FCI's world-class, NIST traceable calibration facility on one of our flow stands matched to your gas application and actual installation conditions.

Theory of Operation

The instrument functionally is based on the thermal dispersion operating principal. A low powered heater produces a temperature differential between two resistance temperature detectors (RTDs) by heating one of the RTDs above process temperature. As the process mass flow rate changes, the differential temperature between the RTDs changes. The differential temperature between the RTDs is proportional to the process mass flow. The flow transmitter converts the RTD differential temperature signal into a scaled flow output signal. The signal from the unheated RTD is used to provide the process temperature value.

Safety Instructions

- **Warning – Explosion Hazard. Do not disconnect equipment when flammable or combustible atmosphere is present.**
- Field wiring shall be in accordance with NEC (ANSI-NFPA 70) for Division 2 hazardous locations CEC (CSA C22.1) for division 2 locations as applicable.
- The instrument must be installed, commissioned and maintained by qualified personnel trained in process automation and control instrumentation. The installation personnel must ensure the instrument has been wired correctly according to the applicable wiring diagram.
- All location specific installation and wiring requirements must be met and maintained. FCI recommends an input power circuit breaker be installed between the power source and the flow meter. This facilitates easy power disconnection during commissioning and maintenance procedures. **A switch or circuit breaker is required if installation is in a hazardous area.**
- The flow meter contains electrostatic discharge (ESD) sensitive devices. Use standard ESD precautions when handling the circuit board assemblies.
- Hazardous Areas: The instrument is designed for use in hazardous areas. The approved area classification is identified on the nameplate along with the temperature and pressure limitations. The USB port and the Serial Communication port do not support the hazardous area requirements and should only be used when the area is declassified.
- When mounting the flow element into the process pipe, it is important that a lubricant/sealant is applied to the mating threads. A lubricant/sealant compatible with the process conditions should be used. All connections should be tightened firmly. To avoid leaks do not overtighten or cross- thread connections.

Order Verification

- Verify the received hardware matches the purchased hardware and application requirements. Verify the Model number part number on the instrument I.D. tag (i.e. ST100 – 10C0…) matches the purchased Model number part number.
- Review the Calibration requirements as specified on the Engineering Data Sheet in the documentation package. Verify the flow, temperature and pressure limits meet the application requirements.

Hardware - Model Descriptions

ST100 – Single point insertion element with flow and temperature process output

ST100L – In Line element with flow and temperature process output

ST102 – Dual point insertion elements with flow and temperature process output

ST110 – Single point insertion element with flow and temperature process output, VeriCal option

ST112 – Dual point insertion elements with flow and temperature process output, VeriCal option

STP100 – Single point insertion element with flow, temperature and pressure process output

STP102 – Dual point insertion elements with flow, temperature and pressure process output

STP110 – Single point insertion element with flow and temperature process output, VeriCal option

STP112 – Dual point insertion elements with flow and temperature process output, VeriCal option

Documentation and Accessories

06EN003400	Installation and Operation Manual
06EN003403	ST100 Configuration Software Manual

Calibration Certification Documentation

PC Configuration Software and USB Cable

Supplemental Manuals , optional

06EN003404	HART Operation Manual
06EN003405	FOUNDATION™ fieldbus Manual
06EN003406	Modbus Operation Manual
06EN003407	PROFIBUS Operation Manual
06EN003408	VeriCal In-Situ Calibration Verification Operation Manual

Supplemental Software, optional

HART DD Files

FOUNDATION fieldbus

PROFIBUS DD File

PDM/DTMs

Technical Specification

Instrument

- **Measuring Capability**
  ST1XX Models: Flow rate, total flow and temperature
  STP1XX Models: Flow rate, total flow, temperature and pressure
- **Basic Style**
  ST100: Insertion, single-point
  ST100L: In-line (spool piece), single-point
  ST102: Insertion, dual-element system
  ST110: Insertion, single-point with VeriCal™ capability
  ST112: Insertion, dual-element system with VeriCal capability
  STP100: Insertion, single-point with pressure measurement
  STP102: Insertion, dual-element system with pressure measurement
  STP110: Insertion, single-point with pressure measurement and VeriCal capability
  STP112: Insertion, dual-element system with pressure measurement and VeriCal capability
- **Flow Measurement Range**
  Insertion Style: 0.25 SFPS to 1000 SFPS [0,07 NMPS to 305 NMPS]
  ST100L In-line: 0.0062 SCFM to 1850 SCFM
  [0.01 Nm3/h to 3,140 Nm3/h]
  – Air at standard conditions; 70 °F and 14.7 psia [0 °C and 1,01325 bar (a)]
- **Temperature Measurement Range**
  Up to 850 °F [454 °C] commensurate with element; see Operating Temperature in Flow Element specification
- **Pressure Measurement Range (STP Models)**
  Available Ranges:
  0 psig to 50 psig [0 bar (g) to 3,4 bar (g)]
  0 psig to 160 psig [0 bar (g) to 11 bar (g)]
  0 psig to 500 psig [0 bar (g) to 34 bar (g)
  0 psig to 1000 psig 0 bar (g) to 70 bar (g)]
- **Media:**
  All gases that are compatible with the flow element material
- **Accuracy:**
  Flow:
  Gas Specific Calibration: ± 0.75% reading, ± 0.5% full scale
  SpectraCal Gas Equivalency: Typically ± 4% reading, ± 0.5% full scale;
  gas conditions specific to application will determine accuracy; utilize FCI's online tool, AVAL, to evaluate your application and provide expected accuracy
  Temperature: ± 2 °F [± 2 °C] (display only, flow rate must be greater than 5 AFPS [1,5 m/sec])
  Pressure (STP Models): ± 0.25% full scale pressure range
- **Temperature Coefficient**
  With optional temperature compensation; valid from 10% to 100% of full scale calibration
  Flow: Maximum ± 0.015% of reading / °F up to 850 °F
  [± 0.03% of reading / °C up to 454 °C]
- **Repeatability**
  Flow: ± 0.5% reading
  Temperature: ± 1 °F [± 1 °C] (flow rate must be greater than 5 AFPS [1,5 NMPS])
- **Turndown Ratio**
  Normally factory set and field adjustable from 2:1 to 100:1 within calibrated flow range; up to 1000:1 possible with factory evaluation of application
- **Temperature Compensation**
  Standard: ± 30 °F [± 16 °C]
  Optional: ± 100 °F [± 55 °C]
- **Agency Approvals pending**
  FM, FMc: Class I, Division 1, Hazardous Locations;
  Groups B,C,D,E,F,G
  ATEX and IECEx: Zone 1, II 2 GD Ex d IIC T4
  CPA, NEPSI
- **Calibration**
  Performed on NIST traceable flow stands and equipment

Flow Element

- **Material of Construction**
  All-welded 316L stainless steel; Hastelloy-C optional
- **Operating Pressure**
  Metal ferrule: 1000 psig [69 bar (g)]
  Teflon ferrule: 150 psig [10 bar (g)] (200 °F [93 °C] maximum)
  Fixed Connection NPT: 1000 psig [69 bar (g)]
  Fixed Connection Flanged: per flange rating
- **Operating Temperature (Process)**
  ST100, ST102 Insertion Style
  All Flow Elements (– FPC, – FP and – S):
  -40 °F to 350 °F [-40 °C to 177 °C]
  -40 °F to 500 °F [-40 °C to 260 °C]
  -40 °F to 850 °F [-40 °C to 454 °C]
  ST110, ST112 Insertion Style
  – FP Style Flow Element:
  -40 °F to 350 °F [-40 °C to 177 °C]
  -40 °F to 500 °F [-40 °C to 260 °C]
  STP Series Insertion Style
  All Flow Elements (– FPC, – FP and – S):
  -40 °F to 257 °F [-40 °C to 125 °C]
  ST100L In-line Style
  – FP and – S Style Flow Element:
  -40 °F to 250 °F [-40 °C to 121 °C]
- **Process Connection**
  Compression Fittings: Models ST100 and ST102 only
  3/4" or 1" male NPT, stainless steel with adjustable Teflon ferrule or metal ferrule; or flanged tapped and threaded for 3/4" fitting, ANSI or DIN flanges
  Compression fittings not available with 850 °F [454 °C] temperature versions of ST100 or ST102
  Retractable Packing Glands
  Low pressure 50 psig [3,5 bar (g)] or medium pressure 500 psig [34 bar (g)] with graphite or Teflon packing material; 1 1/4" male NPT or ANSI or DIN flange
  Teflon packing required when process media is ozone, chlorine or bromine
  Fixed Fittings / All Welded
  1" male NPT or ANSI or DIN flange
  Insertion Length
  Field adjustable lengths:
  1" to 6" [25 mm to 152 mm]
  1" to 12" [25 mm to 305 mm]
  1" to 21" [25 mm to 533 mm]

1" to 36" [25 mm to 914 mm]
1" to 60" [25 mm to 1524 mm]
Fixed lengths from 2.6" to 60" [66 mm to 1524 mm]

- **ST100L In-line Flow Tube**
  Flow element is threaded and keyed in an in-line flow tube, calibrated and supplied as a spool-piece; options include low flow injection tubes and built-in Vortab flow conditioners for optimum low flow rangeability and performance
  Size: 1" diameter tubing; 1", 1 1/2" or 2" schedule 40 pipe
  Length: 9 nominal diameters
  Process Connections: Female NPT, male NPT, ANSI or DIN flanges, or butt weld prepared
  Option: Flanges sized for flow tube
- **Remote Transmitter Configurations:** Transmitter may be mounted remotely from flow element using interconnecting cable (up to 1000' [300 m])
- **STP Models: Additional Specifications on Pressure Sensor**
  Calibrated at nominal 70 °F [21 °C]
  Zero/Span Shift: 0.83% full scale/100 °F [1.5% full scale/100 °C]
  Zero Tolerance: ± 0.5% of full scale
  Span Tolerance: ± 0.5% of full scale
  Long Term Stability: ± 0.2% full scale per year

  Maximum over Pressure:
  50 psi, 100 psi [3,4 bar, 7 bar] versions 3.0 x rated rate range
  500 psi, 1000 psi [34 bar, 70 bar] versions 2.0 x rated rate range

  Minimum burst Pressure (all):
  50 psi, 100 psi [3,4 bar, 7 bar] versions 40 x rated rate range
  500 psi, 1000 psi [34 bar, 70 bar] versions 20 x rated rate range

  Wetted Materials:
  17-4 PH stainless steel diaphragm *(not recommended for hydrogen service; contact FCI for Model STP for use in hydrogen)*

  304 stainless steel fittings

Flow Transmitter/Electronics

- **Operating Temperature: 0 °F to 140 °F [-18 ° to 60 °C]**
- **Input Power**
  AC: 85 Vac to 265 Vac, 50 Hz to 60 Hz
  DC: 24 Vdc ± 20%
- **Power Consumption**
  AC: 85 to 265V = 10W, 1 Flow Element
  13.1W, 2 Flow Element

  DC: 24V = 9.6W, 1 Flow Element
  13.2W, 2 Flow Elements
- **Outputs**
  Analog
  Standard: Three (3) 4-20 mA*, 0-1kHz, or 0-10 kHz pulse/frequency

  4-20 mA outputs are user assignable to flow rate, temperature and/or if so equipped, pressure; outputs are user programmable to full flow range or subsets of full flow range; pulse/frequency output is user selectable as pulse for external counter/flow totalizer, or as 0-1 kHz or 0-10 kHz frequency representing flow rate

  ** Outputs are isolated and have fault indication per NAMUR NE43 guidelines, user selectable for high (>21.0 mA) or low (<3.6 mA)*

  Optional: Standard output plus two (2) 2A SPDT relays

  Relays independently user assignable to flow, temperature or pressure; user programmable for hi/lo trip, hysteresis from 00.0 to 99.9 counts and time delay from 00.0 to 99.9 seconds

  Digital
  Standard: USB, Ethernet
  Optional: HART (comes standard with analog outputs, V7 compliant FOUNDATION fieldbus H1, PROFIBUS PA or Modbus RS-485
- **Auxiliary Inputs**
  Two 4-20 mA input channels; used for FCI administered special configurations to allow ST100 Series to accept inputs from external devices such as gas analyzers, gas composition or pressure sensors
- **Enclosures**
  Main Transmitter / Electronics:
  NEMA 4X, IP67; polyester powder coated aluminum; 4 conduit ports threaded as 1/2" NPT or M20x1.5; 7.74" x 5.40" x 5.00" [196.6 mm x 137.2 mm x 127 mm]; stainless steel enclosure pending
  Local Enclosure (Remote Configuration):
  Model ST100L, Models ST100 and ST102 without packing gland option:
  NEMA 4X, IP67; polyester powder coated aluminum; 2 conduit ports threaded as 1/2" NPT or M20x1.5; 3.75" x 4.00" x 3.24" [95 mm x 102 mm
  x 82 mm]
  Models ST100 and ST102 with medium pressure packing gland option; ST110, ST112 and all STP Models:
  NEMA 4X, IP67; polyester powder coated aluminum; 1 conduit port threaded as 1" NPT or M20x1.5; 5.40" x 4.82" [137.2 mm x 122 mm]
- **Data Logger**
  User programmable for readings per time increment to a maximum of 1 reading/second; removable, circuit board-mountable
  2GB micro-SD (secure digital) memory card supplied; stores approximately 21M readings in ASCII comma-separated format
- **Readout/Display and optical Touch buttons (optional):**
  - Large 2" x 2" [50 mm x 50 mm] LCD; digital plus bar graph and engineering units
  - Digital displays of flow rate, total flow, temperature and pressure (with STP models); user selectable for engineering units
  - Analog bar graph of flow rate
  - Relay/alarm status indication
  - User programmable 17 alphanumeric character field associated with each calibration group
  - Set-Up & Service mode displays text and service codes
  - Four (4) optical touch buttons for user programming of instrument set-up and service interrogation
  - Optical touch button activation through front window – no need to open enclosure to access or activate
  - Display is electronically rotatable in 90° increments to optimize viewing angle

  Note: If readout/display not ordered, all user set-up and service interrogation must be done via computer link to bus comm and/or USB port.

2 INSTRUMENT INSTALLATION

- **Warning –** Consult the manufacturer if dimensional information on the flameproof joints is necessary.
- **Warning –** The ambient temperature range and applicable temperature class of the ST100 Series flow meter is based on the maximum process temperature for the particular application as follows; T6 for - 40 °C ≤ Ta ≤ +65 °C; T1 for - 40 °C ≤ Ta ≤ + 65 °C.
- **Warning –** The painted surface of the ST100 Series flow meter may store electrostatic charge and become a source of ignition in applications with a low relative humidity <30% relative humidity where the painted surface is relatively free of surface contamination such as dirt, dust, or oil. Cleaning of the painted surface should only be done with a damp cloth.
- **Warning –** Do not replace internal battery when an explosive gas atmosphere is present.

Instrument Identification and Outline Dimensions

Appendix A provides outline dimensions and mounting bracket dimensions for all integral and remote mounted electronic configurations. Verify all dimensions meet the application requirements before beginning the installation process.

Insertion Sensor Installation

The proper flow meter location in the process piping configuration is critical to the instruments ability to measure the process variables accurately. FCI recommends 20 nominal pipe diameters upstream and 10 pipe diameters downstream of the instrument installation point for most applications. These distances can be significantly reduced when the flow meter is combined with FCI's flow conditioning technology (Vortab).

Insertion flow elements can be mounted into the process using several available customer selectable configurations; compression fitting mounted, threaded or flanged packing gland mounted, and threaded or flanged fixed "U" length mounted process connections. The specific sensor process connection is customer specified on the Order Information Sheet.

Mount the flow element to the process piping per the application piping requirements. The flow arrow etched on the element should always match the direction of the process flow and the flat should be parallel to flow with-in +/- 3° of rotation. Flow elements with variable insertion lengths should insert ½" inch past the centerline of the process pipe or tube and the flow direction arrow should be aligned and leveled correctly. After the flow element has been located correctly and tightened into place, verify the process seal does not leak by slowly applying pressure until the maximum operation pressure is applied. Check for leaks at the process connection boundary using standard leak detection methods.

Figure 1. shows a properly mounted compression fitting process connection instrument.

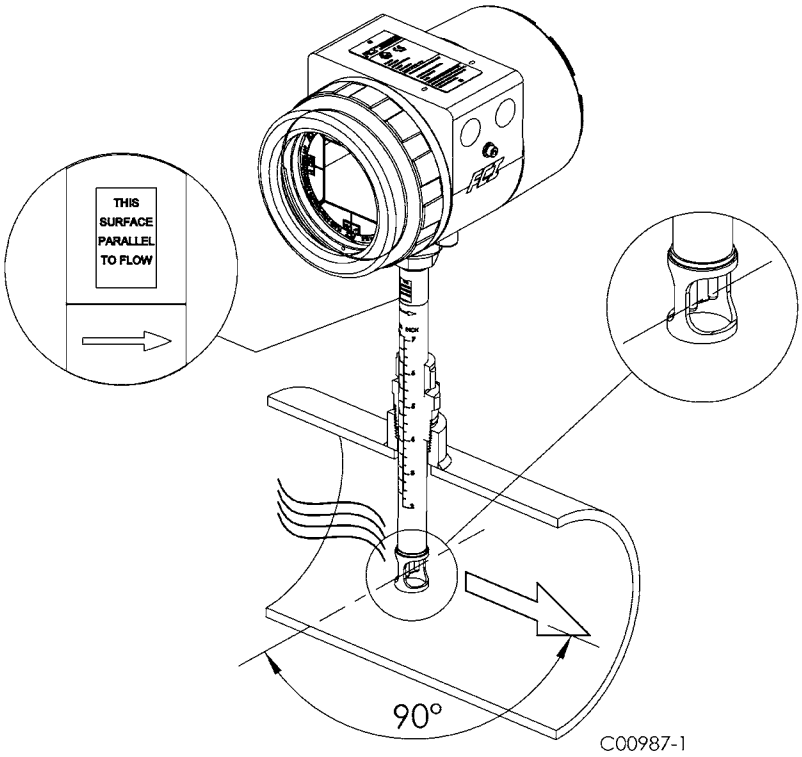

Figure 1

Compression Fitting Mounting

1. FCI single point insertion Flow Meters are calibrated at the centerline of the process pipe. The flow element is properly mounted when the tip of the flow element is located 0.50 inches (13 mm) past the pipe centerline
2. I = Insertion depth
   I.D. = Pipe inside diameter
   T = Pipe wall thickness
   C = Mounting coupling with and installed compression fitting length

   Insertion Depth = I = 0.50 inches + (I.D. / 2) + T + C
3. The scale etched on the side of the insertion pipe indicates the length to the tip of the flow element.
4. Calculate the Insertion depth using the equation in step 2 above.

   I = _____
5. Mark the insertion pipe at the calculated insertion depth.

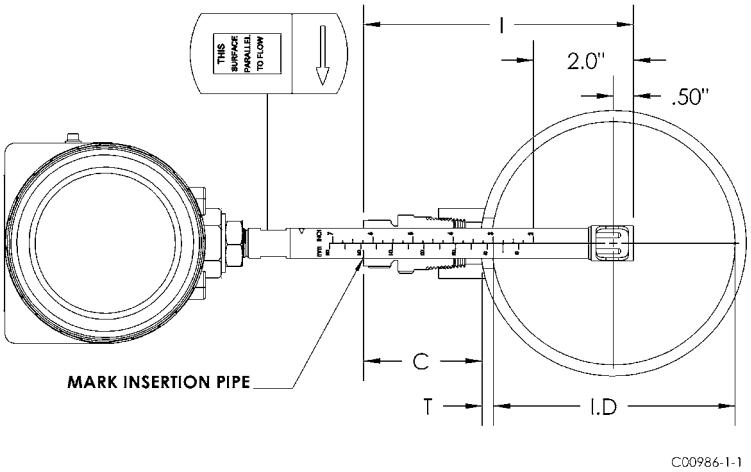

Figure 2

6. Apply proper thread sealant to the tapered pipe thread on the compression fitting and secure into pipe mounting coupling.
7. Insert the flow element to the insertion depth mark and hand tighten the compression nut. Align the orientation flat parallel to the flow direction.
8. Tighten the compression nut to the torque specified for the corresponding ferrule material. Compression fitting manufacture recommends 1-1/4 turns past hand tight.

Ferrule Material	Torque
Teflon	6 FT-Lbs
316 SST	65 FT-Lbs *

Note: The metal ferrule configuration can only be tightened one time. Once tightened, the insertion length is no longer adjustable.

Flange Mount

The flange mount flow element in shown in Fig 3. Attach the process mating flange with care. The correct orientation of the flow element must be maintained to ensure the calibrated accuracy.

- Verify the process media flow matches the flow direction arrow on the flow element.
- Apply appropriate gasket and or sealant to flange mount as required.
- Mate flow element flange to process flange keeping flat oriented properly.
- Secure flanges with appropriate mounting hardware.

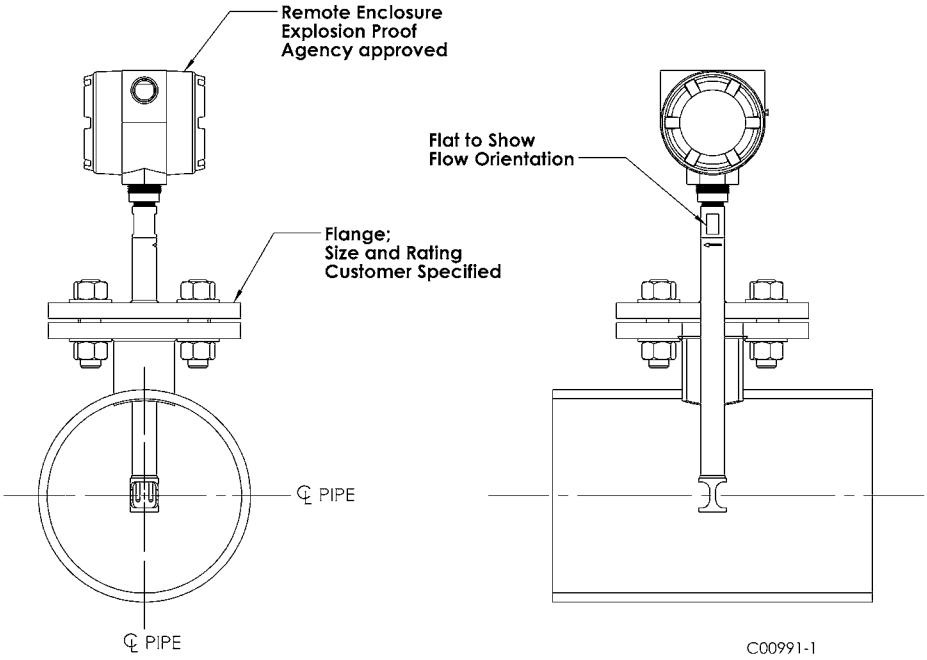

Figure 3

NPT Pipe Thread Mount

The pipe thread configuration is shown in Fig 4. Apply sealant compatible with the process media to male threads. Carefully insert into process mounting coupling. Tighten the flow element until snug and continue until flat and flow direction arrow are aligned with process flow.

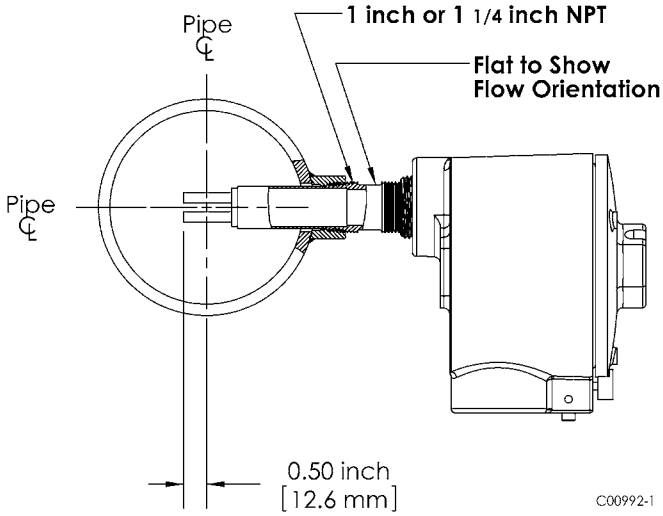

Figure 4

Adjustable/Retraceable Packing Gland Mounting

Applications involving the use of packing glands should refer to drawings located in Appendix A for additional detail.

NPT and flange mounted gland are available. Isolation valves are typically used in packing gland applications.

- Follow the pipe thread or flange mount procedures as described in previous sections.
- Tighten the packing nut until the internal packing is tight enough to prevent excess process leakage but also allow the insertion pipe to be inserted into place. Orient the flat and flow arrow properly.
- Proceed to insert the flow element into process media pipe. For the medium pressure packing gland, use the adjusting nuts on the all-thread to pull the flow element into proper position. Tighten the opposing lock nuts.
- Tighten the packing nut another ½ to 1 turn until tight (approximately 65 – 85 ft-lbs)
- On low pressure packing glands, align the split ring collar with connecting strap on packing nut. Tighten the two ¼-28 cap screws on the split ring locking collar.

STP100 and STP102A Flow Element Installation

The Model STP100 and STP102A add an additional pressure transducer measurement as a third process variable output. The process connections available on the STP model include the standard connections available on the ST model except the compression fitting. The ST102 will have two probe assemblies. Available process connections include:

- Retractable Packing Gland
- Fixed NPT
- Flanged

All flow element mounting and securing instructions for the selected process connections are identical to the ST100. These details are provided in the previous process connection mounting sections.

The pressure limitation for the STP model will be determined by the selection of the pressure transducer. The available options include 50, 160, 500 and 1000 psig (3.44, 11.03, 34.47 and 69.95 bar) maximum pressure ranges.

The pressure transducer is offered in two different temperature service ranges:

- Standard: 32 to 176°F (0 to 80°C)
- Explosion Proof (Ex): -22 to 212°F (-300 to 100°C)

The pressure transducer is located inside the rectangular shaped enclosure attached to the flow element. The pressure tap is located in the center of the two thermowells and extends through the center of the insertion pipe into the enclosure where the transducer is located. Because the pressure transducer is located several feet away from the process media, at the end of a dead head tube assembly, the pressure transducer will be exposed to the external ambient temperature of the flow element.

Flow Element Wiring

The STP100/102A can be configured with integral or remote electronics. Wiring diagrams for these configurations are located in Appendix B. Remote configurations require a 10 conductor shielded cable as specified in the *Instrument Wiring Table 1*.

STP100/102A Electronics Description

The electronic transmitter for the instrument provides flow, temperature and pressure output on the display and the customer selected output mode, analog or digital.

Analog 4-20mA output: factory default setup

- Output #1 – Flow or Two point average Flow
- Output #2 – temperature or Two point average Temperature
- Output #3 – Pressure

HART *output*

- Command 9 – Slot 0, 2, 4: Flow or Two point average Flow.
- Command 9 – Slot 5: Temperature or Two point average Temperature
- Command 9 – Slot 6: Pressure

Fieldbus output

- Flow AI Block – Two point average Flow
- Temperature AI Block – Two point average Process Temperature
- Pressure AI Block - Pressure

- Process Transducer block – index 13, PRIMARY_VALUE (Average FLOW)
- Process Transducer block – index 15, SECONDARY_VALUE (Average TEMPERATURE)
- Process Transducer block – index 19, Quaternary_VALUE (Pressure)

Modbus output

- Command 3 – Two point average Flow
  Two point average Temperature
  Pressure, available on STP models
  Totalizer

Troubleshooting

The "Service Mode" for both HART and Foundation Fieldbus provide access to the individual sensor output values.

The 102A electronics transmitter can recognize a disconnected flow element. If this condition is detected, the instrument will indicate a fault condition and display process variables from the sensor that remains connected to the transmitter. The fault will self-correct when the sensor is re-connected.

ST102A and STP102A Flow Element Installation

The Model ST/STP102A is a dual-element averaging system operating through a single transmitter. The ST/STP102A Flow Element offers the same process connections that are available on the basic ST100. The ST/STP102A will have two probe assemblies. Available process connections include:

- Compression Fitting
- Retractable Packing Gland
- Fixed NPT
- Flanged

All flow element mounting and securing instructions for the selected process connections are identical to the ST100. These details are provided in the previous process connection mounting sections. Each Flow element is identified with the instrument serial number followed by a -1 or -2.

For example:

Serial no: 409486-1	Description - flow element no.1
Serial no: 409486-2	Description - flow element no.2

Installed Point Locations

The flow element point locations for a two point averaging system are based from the US EPA – Method 1 Traverse Point recommendations. This method is applicable to gas streams flowing in ducts, stacks, and flues with inside diameters greater than 12 inches. The recommended point locations for a two point averaging system are shown in the diagram below.

Locate and secure the flow elements into position using (0.146 x Pipe I.D. + 0.50 inches) as the location dimension from the pipe I.D. to the end of the flow element.

Flow Element Wiring

The ST/STP102A can be configured with one integral and one remote flow element or with two separate flow elements and remote electronics. Wiring diagrams for these configurations are located in Appendix B. Each of the flow elements on the ST102A/STP102A are connected to the transmitter using an 8 conductor shielded cable as specified in the *Instrument Wiring Table 1*.

ST/STP102A Electronics Description

The electronic transmitter for the ST/STP102A type instruments provides a two point averaged flow and temperature output on the display and the customer selected output mode, analog or digital.

Analog 4-20mA output: factory default setup

- Output #1 – Two point average Flow
- Output #2 – Two point average Temperature
- Output #3 – Pressure, available on STP models

HART *output*

- Command 9 – Slot 0, 2, 4: Two point average Flow.
- Command 9 – Slot 5: Two point average Temperature
- Command 9 – Slot 6: Pressure

Fieldbus output

- Flow AI Block – Two point average Flow
- Temperature AI Block – Two point average Process Temperature
- Process Transducer block – index 13, PRIMARY_VALUE (Average FLOW)
- Process Transducer block – index 15, SECONDARY_VALUE (Avrage TEMPERATURE)

Modbus output

- Command 3 – Two point average Flow
  Two point average Temperature
  Pressure, available on STP models
  Totalizer

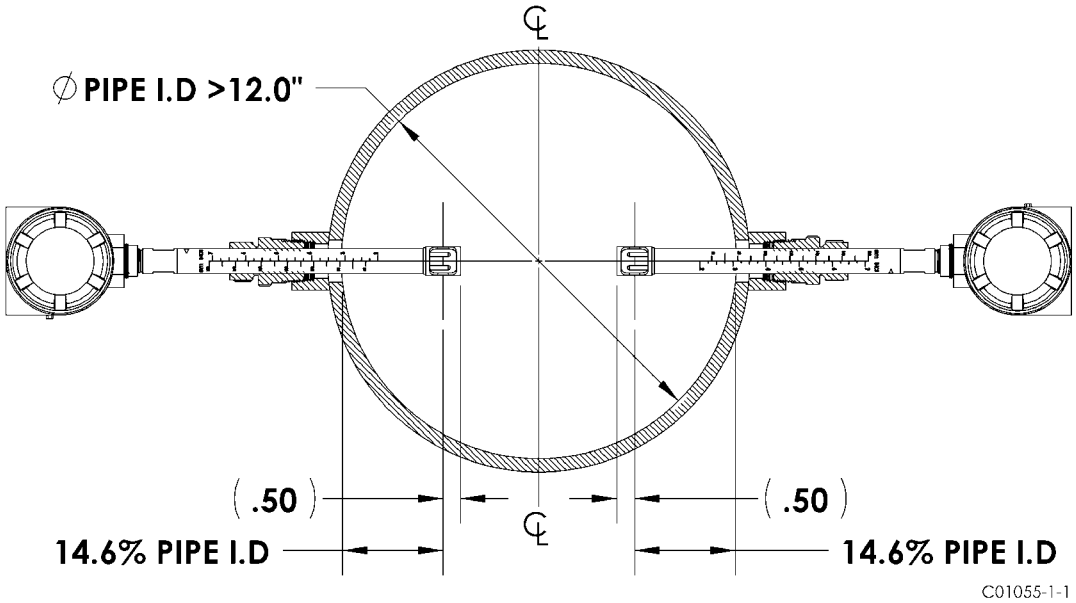

Troubleshooting

The "Service Mode" both HART and FOUNDATION fieldbus provide access to the individual sensor output values.

The ST/STP102A electronics transmitter can recognize a disconnected flow element. If this condition is detected, the instrument will indicate a fault condition and display process variables from the sensor that remains connected to the transmitter. The fault will self-correct when the sensor is re-connected.

In-Line Sensor Installation

The sensor can be threaded, flanged or butt weld mounted to the process piping. The specific sensor process connection is customer specified on the Order Information Sheet.

Mount the sensor to the process piping per the application piping requirements. Verify the flow direction arrow is pointed in the correct direction. After the sensor head has been located correctly and tightened into place, verify the process seal does not leak by slowly applying pressure until the normal operation pressure is applied. Check for leaks at the process connection boundary.

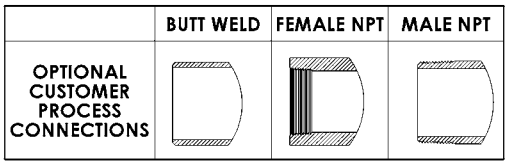

LINE SIZE	"A" LENGTH
1"	9"
1 1/2"	13.5"
2"	18"

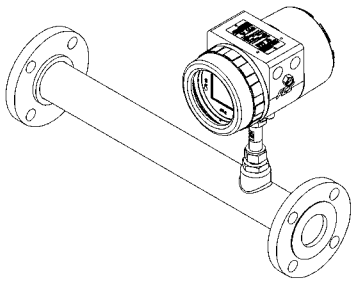

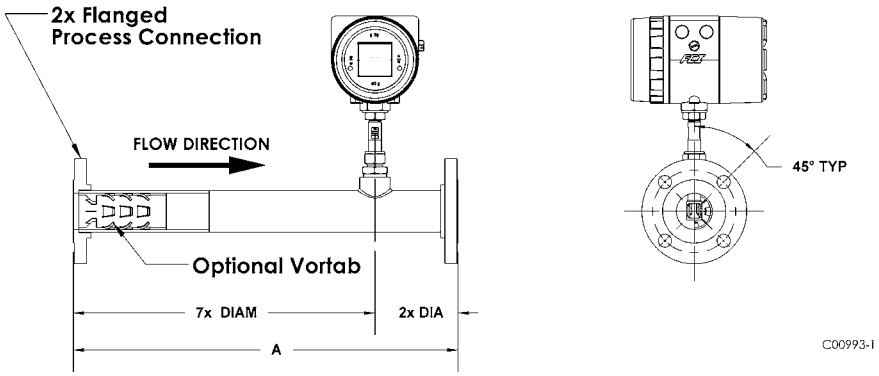

Figure 5

Flow Transmitter Electronics Installation

The instrument electronic transmitter can be an integral part of the flow element or it can be mounted remotely using a shielded cable between the flow element and the electronics.

Supply connection wiring must be rated at least 90 °C.

Integral Electronics

The integral electronics package is mounted during the flow element installation process. The integral electronics can be rotated +/- 180 degrees on the top of the flow element insertion pipe. This is done by loosening the lock nut at the base of the enclosure and rotating the enclosure to the preferred orientation. **Do not rotate the electronics enclosure more than +/- 180 degrees, damage to internal wiring may result from over rotating the enclosure!**

Lock Nut Torque Specification: 30-35 ft-lbs (40-47 N-m)

The Integral electronics should be supported in applications where excessive vibration is present. A mounting bracket is available from FCI to support the electronics when additional support is required.

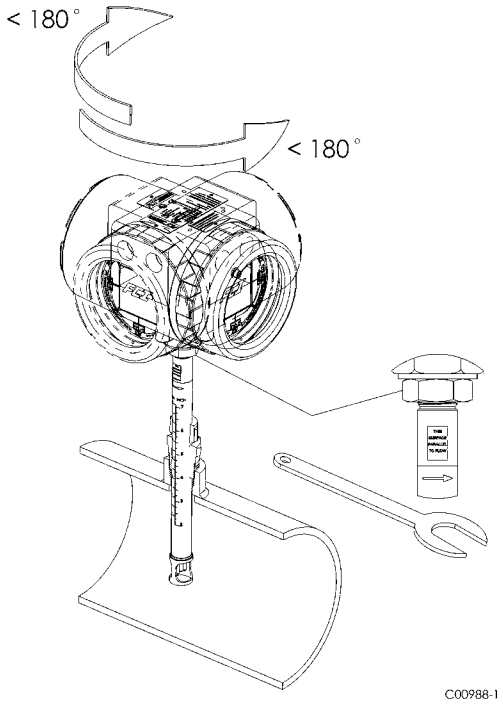

Figure 6

Remote Electronics

A mounting bracket is supplied when the Transmitter is ordered for remote mounting. The bracket mounting details are shown in Figure 7. below. These details are also available on the Outline Installation Drawings located in appendix A. The electronics can be easily wall or pipe mounted. The mount bracket is designed for .25 inch or M6 mounting hardware. The electronics should be securely mounted to cement or structural support columns or beams. Mounting to plaster is not recommended and does not meet system approval requirements.

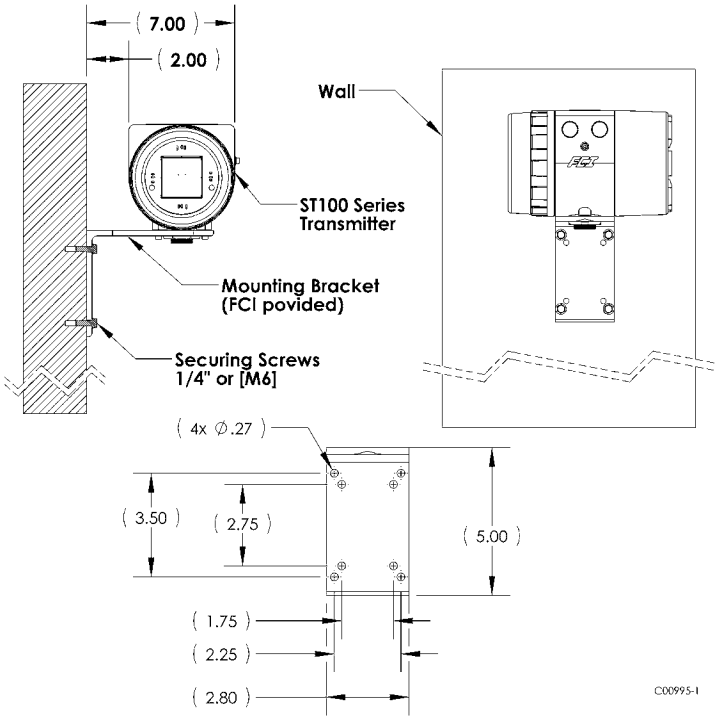

Figure 7

Remote Pipe Mounting

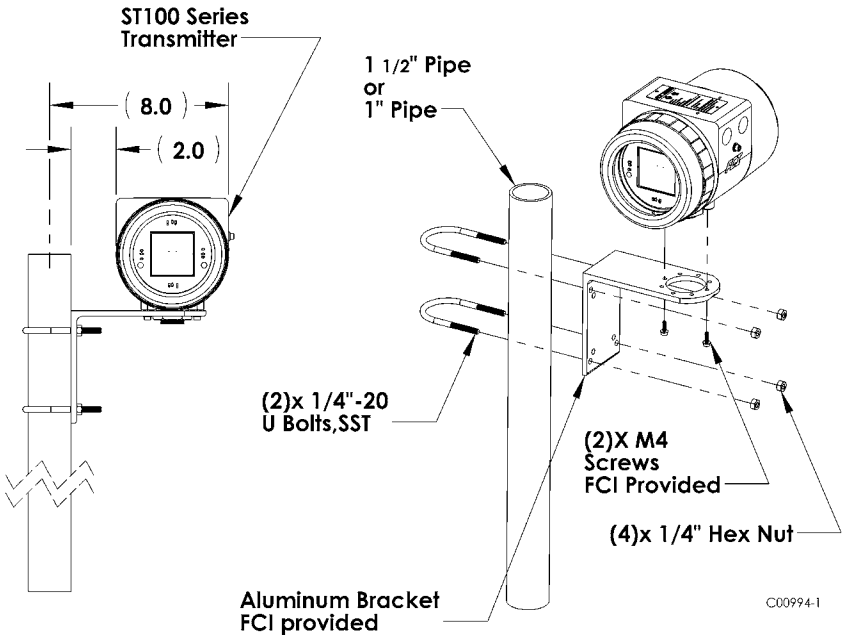

Figure 8

Instrument Wiring

The flow transmitter can be powered by 85 – 265 Vac or 24 Vdc as specified in the instrument specification. The electronics cannot be configured to switch between AC and DC power. **For 220/265 Vac installations, a neutral reference circuit must be used**.

All cable glands and conduit fittings must meet or exceed the area approval rating where the instrument is being installed.

The recommended instrument wiring routing is shown in figures 15 and 16.

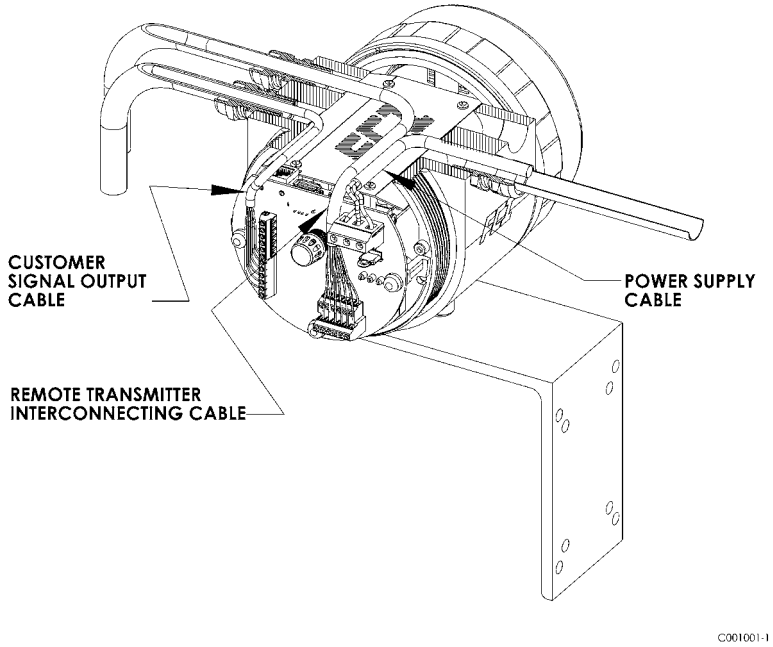

Figure 15

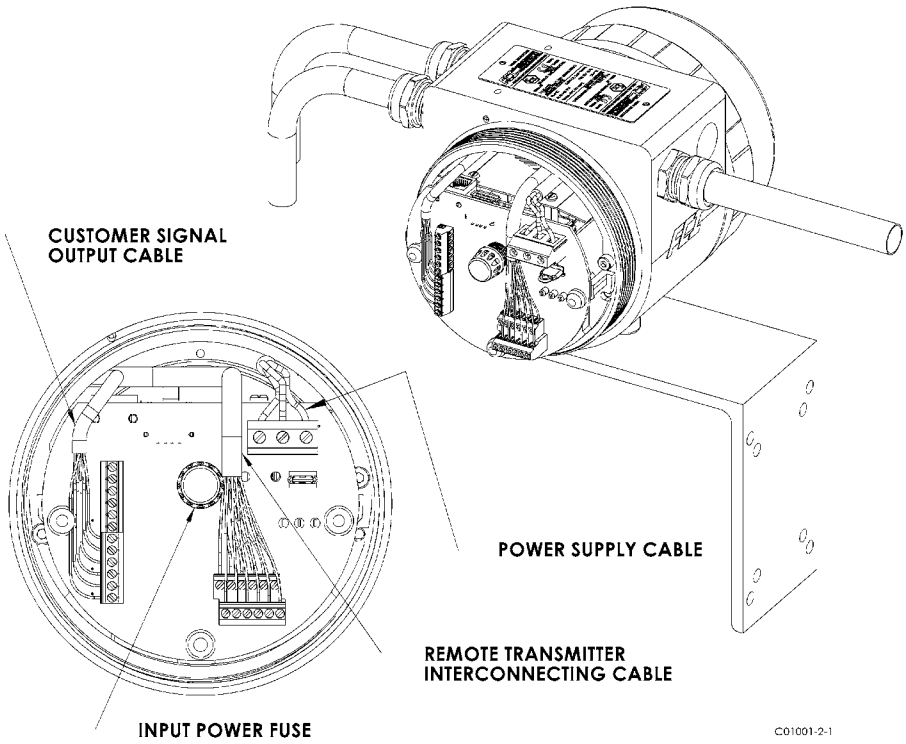

Figure 16

Connection	10 FT	50 FT	100 FT	250 FT	500 FT	1000 FT
Power AC or DC	22	22	22	20	18	16
Flow Element (8 Conductor Shielded)	24	24	24	22	22	18
STP Flow Element (10 Conductor Shielded)	22	22	22	22	22	18
Analog Out (HART)	16-30	16-30	16-30	16-30	16-30	16-30
Digital Out Foundation Fieldbus	← FF-844 H1 (14-30 AWG) →					
Modbus	← RS485 (14-30 AWG) →					

Instrument Wiring Table 1 - Recommended AWG

Analog output maximum load: 600 ohms

Instrument Power Requirements: See Instrument Specifications, page 8.

Instrument Fuse rating and part no:

AC Input Power (85 - 265 Vac):

MFR - LITTLEFUSE, 2A TR5 SLO-BLO series 383 (2 Amp rating), part no. 38312000000; FCI part no. 022499-01.

DC Input Power (24 Vdc):

MFR - LITTLEFUSE, 2A TR5 SLO-BLO series 383 (2 Amp rating), part no. 38312000000; FCI part no. 022499-01.

The input power fuse is located on the customer interface board, see figure 16. **Instrument power must be turned off when replacing the fuse**. To replace the fuse, unscrew the clear fuse cover and pull the fuse straight out of the holder. Replace the fuse with the recommended fuse listed above by aligning the fuse pins with the receiving holes located in the fuse holder and pushing securely into place until the fuse bottoms in the holder. Replace the fuse cover.

Reference the following wiring diagrams in Appendix B for specific integral and remote mounted electronics.

Figure B-1 : Integral - AC Input Power, Analog and HART Output	Figure B-9 : Integral - AC Input Power, Modbus Output
Figure B-2 : Remote - AC Input Power, Analog and HART Output	Figure B-10 : Remote - AC Input Power, Modbus Output
Figure B-3 : Integral - DC Input Power, Analog and HART Output	Figure B-11 : Integral - DC Input Power, Modbus Output
Figure B-4 : Remote - DC Input Power, Analog and HART Output	Figure B-12 : Remote - DC Input Power, Modbus Output
Figure B-5 : Integral - AC Input Power, FOUNDATION fieldbus Output	Figure B-13 : Remote - 8 Conductor Interconnection Cable
Figure B-6 : Remote - AC Input Power, FOUNDATION fieldbus Output	
Figure B-7 : Integral - DC Input Power, FOUNDATION fieldbus Output	Figure B-14 : Source - Pulse/Fequency Output
Figure B-8 : Remote - DC Input Power, FOUNDATION fieldbus Output	Figure B-15 : Sink - Pulse/Fequency Output
ST102/STP102	STP100/STP102
Figure B-16 : Flow Element Connection - Integral/Remote	Figure B-18 : Remote - 10 Conductor Interconnection Cable
Figure B-17 : Flow Element Connection - Remote	

Post Installation Check

Verify all wiring connections are secure and correct to the appropriate wiring diagram. Verify the flow direction arrow on the flow element is pointing in the correct direction. Verify the mechanical process connection is secure and meets the system pressure requirements.

Basic Commissioning and Start-Up

When all wiring and process connections have been verified, apply power to the instrument. The instruments with the LCD will briefly show a welcome screen indicating the software version followed by the normal operation process screen. The normal process screen indicates process flow rate, total flow, temperature and pressure depending on the options ordered. The calibration group and group description are also displayed at the bottom of the screen. Verify the process variable engineering units are correct.

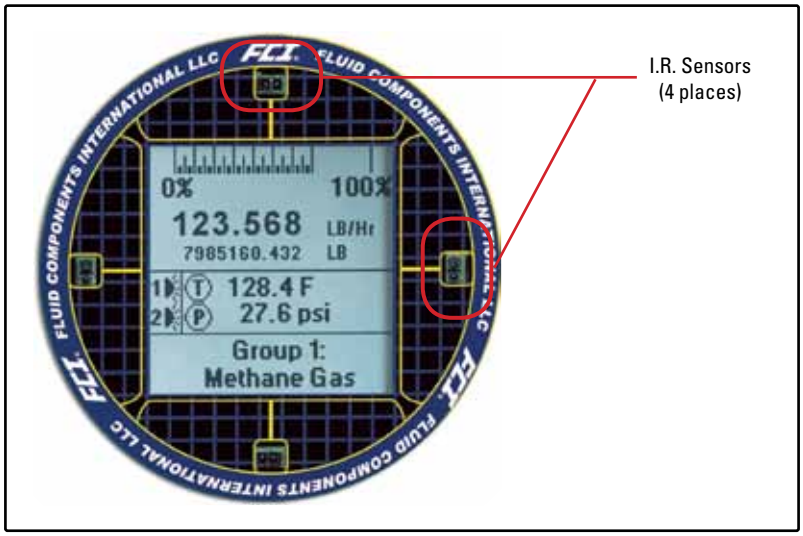

Normal Operation Process Screen

The instrument LCD display functions as a basic HMI setup tool. The four buttons (IR sensors) located at the 3, 6, 9 and 12 o'clock positions on the display provide access to the basic setup parameters. The screen flow is shown in figure 18. The HMI setup menu can be accessed thru the window without removing the electronics enclosure lids. This is done by holding your finger in front of the 12 o'clock sensor for 3 seconds. The LCD acknowledges the button selection by inverting the display characters and background while the button is held.

To enter HMI display menu, cover 12 o'clock button for 3 senconds.

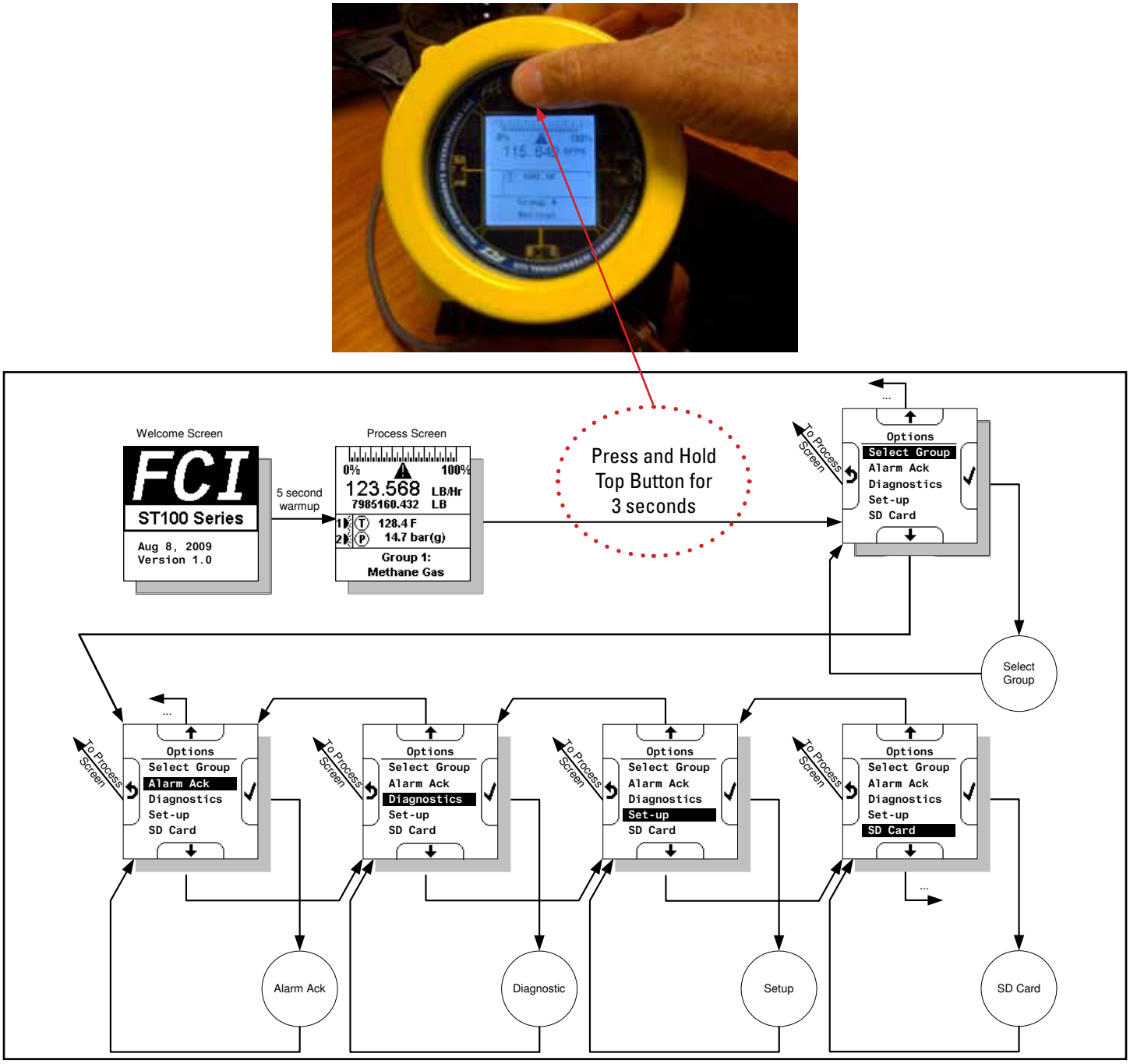

Figure 18: LCD/HMI Basic Screen Flow

HMI Display Navigation

The four IR sensors are used to navigate the HMI menu structure. The top and bottom sensors are used to scroll thru the menu selections. The right sensor button is used to select and the left sensor button is used to return to the previous menu.

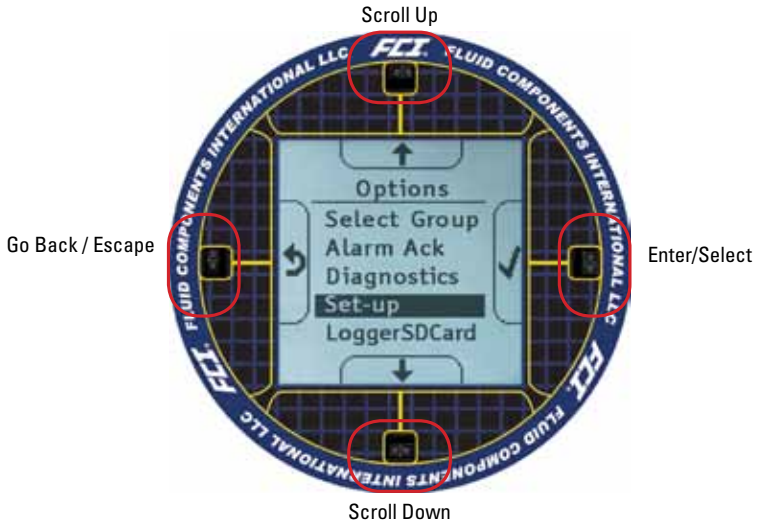

The setup menu allows the user to modify all process variable engineering units and the pipe dimensions. The basic functions that that are accessible from the HMI menu are listed below:

1. Select Group (5 calibrations groups are available)
2. Acknowledge Alarms
3. Identify system faults
4. Set up:
   Process variable engineering units
   Pipe dimensions
   Display orientation
   Display contrast
5. SDcard remove and insert acknowledgment

HMI user password: E#C

The HMI provides access to some of the basic instrument setup features. This allows the user to make configuration changes to the instrument without opening the enclosure lids. The ST100 PC interface configuration application provides an alternate method of configuring the instrument. The PC configuration application is easy to use and is the recommended configuration tool when commissioning the instrument. The ST100 configuration software instructions are provide in a supplement manual, FCI document number 06EN003403.

*ON display indicates PC Configuration Application is connected.

System Fault and Alarm Indication

The ST100 LCD Display indicates both alarm and fault conditions with a caution triangle icon directly above the flow rate indication on the LCD.

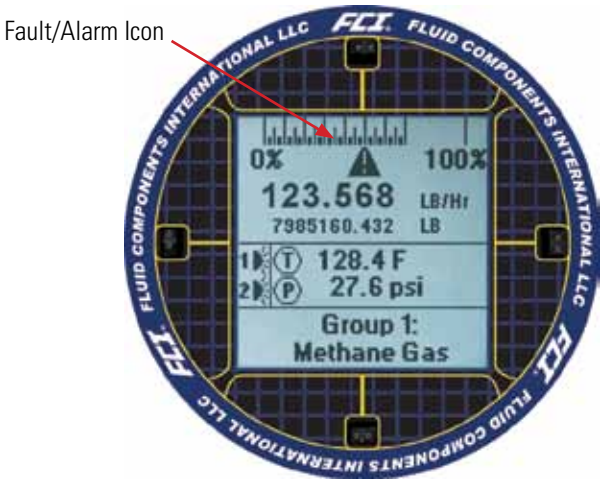

When an alarm condition is met, the indicator will flash on and off. The flashing condition will continue until the alarm condition no longer exists or the alarm is acknowledged using the HMI display menu. The alarm indicator can also be turned off by disabling the condition through the configurator alarm Tab.

Instrument fault codes can be viewed by selecting the **Diagnostics** branch in the configurator tree or the HMI display menu.

Functions

Real Time Clock Setup

The ST100 clock reset function is accessed via the ST100 Configurator. Reference the ST100 Configuration supplemental manual for installation instructions, FCI document number 06EN003403. The Configuration program is installed on a PC or Laptop computer and can be connected via the USB or Ethernet. The USB is the primary mode of communication with the ST100.

Welcome Screen

To access the ST100 Clock Reset Function: 2

1. Connect a USB cable between the computer with the Configuration Application installed and the USB connection on the interface board.
2. Select the ST100 Configurator icon to open the application. The application will open to the welcome screen as shown above.
3. Select the USB Connect button at the top of the screen. The Configuration application will open to the Process Data screen as shown below.

4. Select the *Advanced Setup* menu in the left menu tree.

5. Select the Date and Time Tab at the top of the page.

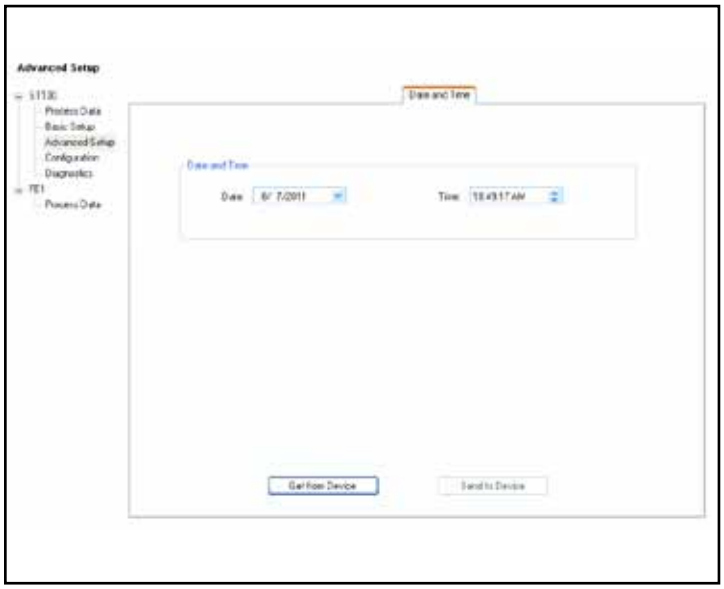

6. Select the “Get from Device” button at the bottom of the page.
7. Set the correct Date and Time.
   Press the “Send to Device” button. (User password: 2772)
8. Verify the Date and Time have been set correctly by pressing the “Get from Device” button.

Totalizer

The Flow totalizer function accumulates the instrument total flow, very much like the odometer on an automobile. The engineering flow units must be set in mass or volumetric units for this function to work. The total flow value is displayed directly below the real time flow value on the instrument LCD display.

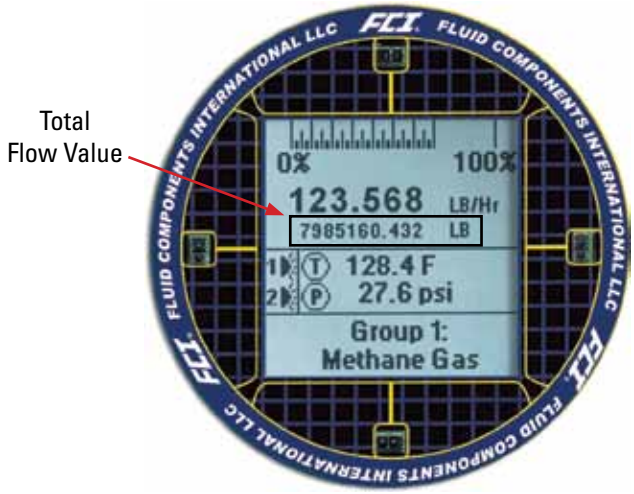

Totalizer Setup

The ST100 totalizer function is accessed via the ST100 Configurator. Reference the ST100 Configuration supplemental manual for installation instructions, FCI document number 06EN003403. The Configuration program is installed on a PC or Laptop computer and can be connected via the USB or Ethernet. The USB is the primary mode of communication with the ST100.

To access the ST100 Totalizer Function:

1. Connect a USB cable between the computer with the Configuration Application installed and the USB connection on the interface board.
2. Select the ST100 Configurator icon to open the application. The application will open to the welcome screen as shown above.
3. Select the USB Connect button at the top of the screen. The Configuration application will open to the Process Data screen as shown below.

Welcome Screen

4. Select the Basic Setup menu in the left menu tree
   (User password: 2772)

Process Data Screen

5. Select the Totalizer tab at the top of the page.
6. Select the "Totalizer Enabled" box.
7. Select the "Show Totalizer Value" box.
8. Select the "Send to Device" button.

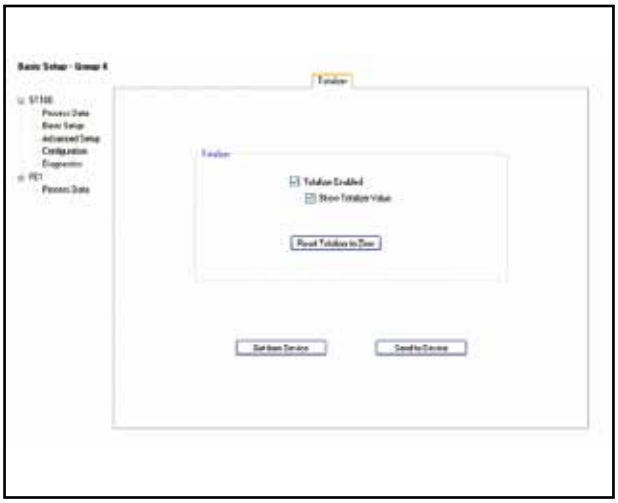

Basic Setup Totalizer Tab Screen

The total flow value will now be displayed on the Instrument LCD display and the Process Data screen on the ST100 Configuration Application. The total flow value can be reset to zero using the "Reset Totalizer to Zero" button on the Basic Setup Totalizer screen.

Data Logging

The ST100 SD Card Logging features can be accessed via the ST100 Configurator Reference the ST100 Configuration supplemental manual for installation instructions, FCI document number 06EN003403. The Configuration program is loaded on a PC or Laptop and can be connected via the USB or Ethernet. The USB is the primary mode of communication with the ST100.

Welcome Screen

To access the ST100 Logging Function:

1. Connect a USB cable between the computer with the Configuration Application installed and the USB connection on the interface board.
2. Select the ST100 Configurator icon to open the application. The application will open to the welcome screen as shown above.
3. Select the USB Connect button at the top of the screen. The Configuration application will open to the Process Data screen as shown below.

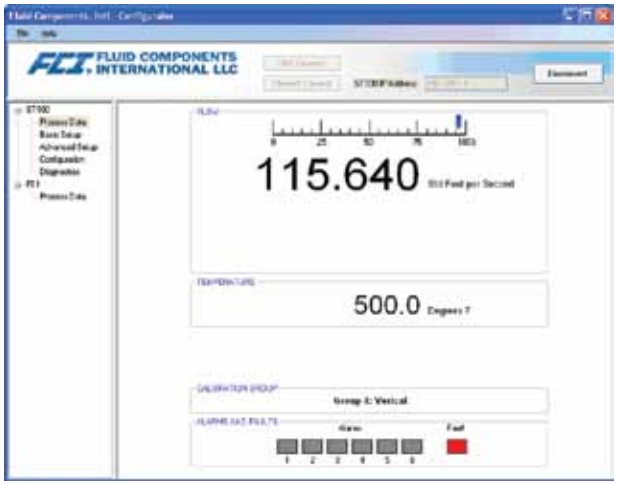

Process Data Screen

4. Select the **Basic Setup** in the menu located in the left menu. Then select the SD Card Logging Tab. You should now see the Logging setup menu as shown below.

Basic Setup, SD Card Logging Tab Screen

A logging session can be started by 2 different methods:

- Automatic when the SD card s present during an instrument power up.
- Manually using the ST100 Configuration Application.

Manual Start Logging Method

1. Begin with the Instrument power On and the Instrument connect to the Configuration Application thru the USB port. Verify a memory card is inserted into the card slot on the back side of the interface circuit board. The card should be inserted as shown with the contacts facing up. **Inserting the SD card upside down will cause damage to the socket.** The card will click into position when properly inserted.
2. Using the Logging Setup Menu in the ST100 Configuration Application:
   - Press the "Remove Micro SD Card" button in the Logging setup Menu, this will close any logging session that might be in progress.
     (User Level Password = 2772)
   - Select the Logging time interval.
   - Press the "Send to Device" button.
   - Press the "Insert Micro SD Card" button, the user may be prompted for a password, enter **2772** and press enter.
   - The instrument begins logging Process Data.
   - Press the "Remove Micro SD Card" button to close the logging file.
   - Remove the SD Micro Card and open the log file as a .csv format. Each log file session creates a log file with a name format: Logyymmddhhmmss.csv

     Where:

     yy is the 2 digit year

     mm is the 2 digit month

     dd is the 2 digit day

     hh is the 2 digit hour

     mm is the 2 digit minute

     ss is the 2 digit second

     Example File Name: Log110524134322

Note: The date and time information is retrieved from the real-time clock on the STAK CORE. If there is no battery installed, and/or if the date and time have not been set prior to the initiation of the logging session, this could result in erroneous log file names.

Log File Contents

Log Entry Format

Each log entry consists of a single line (row) of data.

Each log entry is of a similar format:

<year>,<month>,<day>,<timestamp "hh:mm:ss">,<tag>,<data 1>, <data 2>,…

Where:

<year> is the 4 digit year

<month> is the 2 digit month

<day> is the 2 digit day

<timestamp> is the time of day in hours (2 digit): minutes (2 digit) : seconds (2 digits)

<tag> is the 2 character entry type identifier

<data 1> <data 2> are the entry type specific data items

Log Entries

There are different types of log entries, and these are identified by the unique 2 character "tag" field. The data following the tag varies depending on the type of log entry. A listing of the Tags and the associated description is shown below.

Tag	Tag Description
PD	Process Data
FL	Fault
CF	Core Fault
AL	Alarm Activation
DR	Automatic Delta-R test

Process Data – tag PD

A process data entry is added to the log file based on the frequency of logging specified via the "0Q" CLI command.

Following the tag field, the data items are (in this order):

- Flow (in customer units)
- Temperature (in customer units)
- Pressure (in customer units)
- Totalizer (if present, in customer units. If totalizer not enabled, then "0.0")
- CORE fault bitmap (8 character hexadecimal) for factory use
- FE0 fault bitmap (8 character hexadecimal) for factory use
- FE1 fault bitmap (8 character hexadecimal) for factory use

year	month	day	time	tag	flow	temp	press	Total	fault code	fault code	fault code
2011	5	24	13:44:09	PD	0	85.87962	0		0x00100000	0x00000001	0x00000000
2011	5	24	13:44:39	PD	0	85.88636	0		0x00100000	0x00000001	0x00000000
2011	5	24	13:45:09	PD	0	85.88426	0		0x00100000	0x00000001	0x00000000
2011	5	24	13:45:39	PD	0	85.89391	0		0x00100000	0x00000001	0x00000000

Log File Entry Example: Instrument is in a no flow condition

Alarm Activation/Deactivation – tag AL

When an alarm condition either activates (alarm condition met) or deactivates (alarm condition no longer present), an alarm log entry will be generated.

Following the tag field, the data items are:

- Alarm Id (1..6)
- Activated (1) or Deactivated (0)
- Alarm mode:
  - Flow high: 1
  - Flow low: 2
  - Temperature high: 3
  - Temperature low: 4
  - Pressure high: 5
  - Pressure low: 6
- Alarm process data value
  - If Alarm mode 1 or 2, then flow (in customer units)
  - If Alarm mode 3 or 4, then temperature (in customer units)
  - If Alarm mode 5 or 6, then pressure (in customer units)

year	month	day	time	tag	Alarm ID	Act/ De-Act	Mode	PD value	fault code	fault code	fault code
2011	5	24	13:44:09	AL	1	1	2	0	0x00100000	0x00000001	0x00000000
2011	5	24	13:44:39	AL	2	1	3	86.63182	0x00100000	0x00000001	0x00000000

Log File Entry Example: Alarm 1 and 2 activated

FE Self Test: Delta-R – tag DR

When an automatic Delta-R test for an FE is executed, the results are logged with a Delta-R log entry.

Following the tag field, the data items are:

- FE Id (0..15)
- Delta-R low measured flow value (in customer units)
- Delta-R low expected flow value (in customer units)
- Delta-R medium measured flow value (in customer units)
- Delta-R medium expected flow value (in customer units)
- Delta-R high measured flow value (in customer units)
- Delta-R high expected flow value (in customer units)

year	month	day	time	tag	FE ID	DR low m	DR low e	DR med m	DR low e	DR hi m	DR hi e
2011	5	24	13:44:39	DR	0	60.48953	60.48953	100.48953	100.48953	150.48953	150.48953

Log File Entry Example: Automatic Delta R Calibration Check

Note: This log function is setup in the Diagnostic menu under the Scheduled Tests tab

Two other tag codes will be logged if the instrument identifies a system fault. These additional tags are **FL** and **CF**. If these fault tags are identified in a log file, contact FCI customer service.

Intentionally Left Blank

APPENDIX A - OUTLINE DIMENSIONAL DRAWINGS

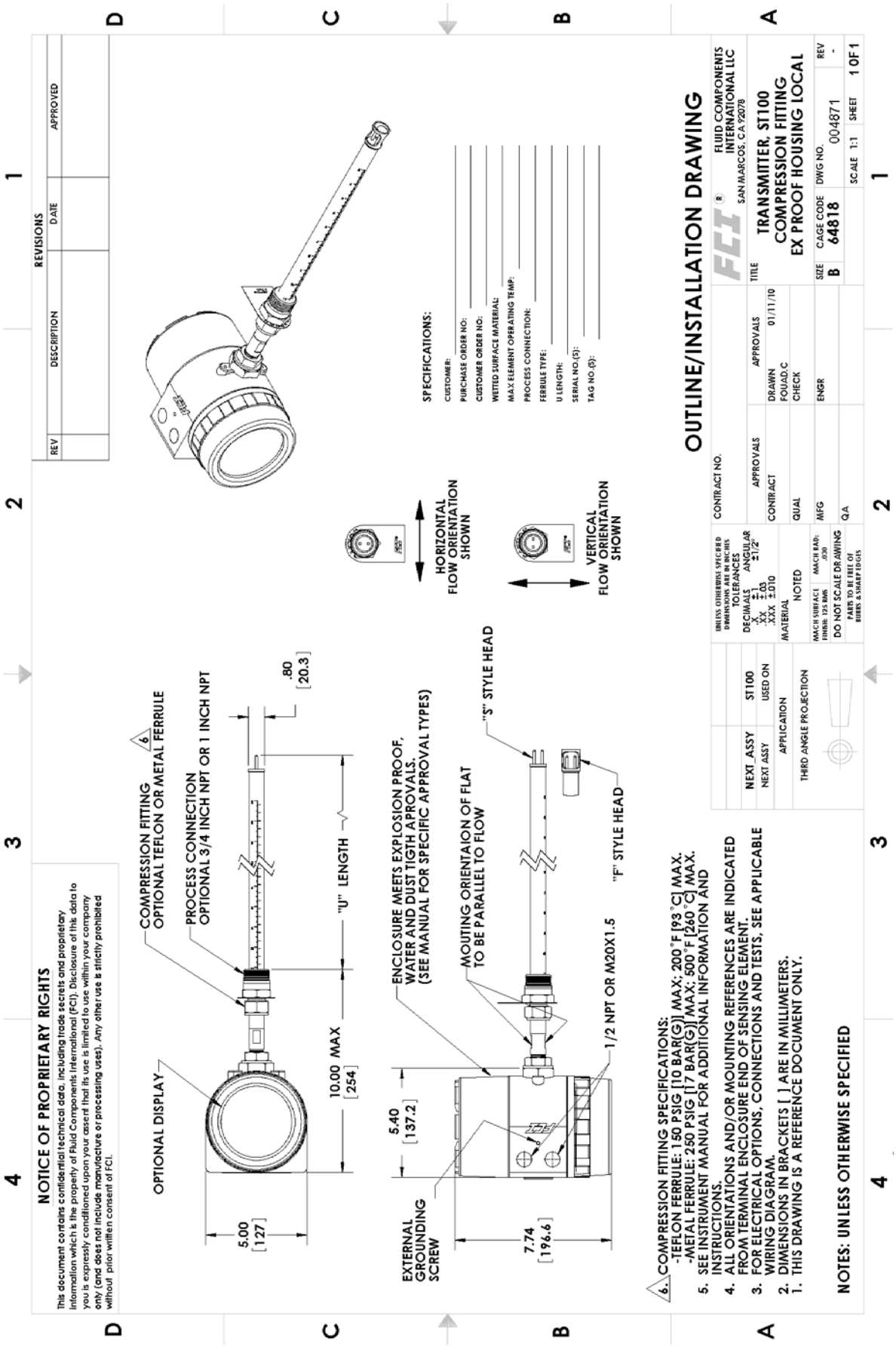
REVISIONS
REV
DESCRIPTION
DATE
APPROVED
SPECIFICATIONS:
CUSTOMER:
PURCHASE ORDER NO:
CUSTOMER ORDER NO:
WETTED SURFACE MATERIAL:
MAX ELEMENT OPERATING TEMP:
PROCESS CONNECTION:
FERRULE TYPE:
U LENGTH:
SERIAL NO.(S):
TAG NO.(S):
HORIZONTAL FLOW ORIENTATION SHOWN
VERTICAL FLOW ORIENTATION SHOWN
OUTLINE/INSTALLATION DRAWING
FLUID COMPONENTS INTERNATIONAL LLC
SAN MARCOS, CA 92078
TRANSMITTER, ST100
COMPRESSION FITTING
EX PROOF HOUSING LOCAL
64818
004871
SCALE 1:1
SHEET 1 OF 1
NOTICE OF PROPRIETARY RIGHTS
This document contains confidential technical data, including trade secrets and proprietary information which is the property of Fluid Components International (FCI). Disclosure of this data to you is expressly conditioned upon your assent that its use is limited to use within your company only (and does not include manufacture or processing uses). Any other use is strictly prohibited without prior written consent of FCI.
COMPRESSION FITTING OPTIONAL TEFLON OR METAL FERRULE
PROCESS CONNECTION OPTIONAL 3/4 INCH NPT OR 1 INCH NPT
OPTIONAL DISPLAY
"U" LENGTH
10.00 MAX [254]
5.00 [127]
.80 [20.3]
ENCLOSURE MEETS EXPLOSION PROOF, WATER AND DUST TIGTH APROVALS. (SEE MANUAL FOR SPECIFIC APPROVAL TYPES)
MOUTING ORIENTAION OF FLAT TO BE PARALLEL TO FLOW
"S" STYLE HEAD
"F" STYLE HEAD
1/2 NPT OR M20X1.5
5.40 [137.2]
7.74 [196.6]
EXTERNAL GROUNDING SCREW
6. COMPRESSION FITTING SPECIFICATIONS:
-TEFLON FERRULE: 150 PSIG [10 BAR(G)] MAX: 200°F [93°C] MAX.
-METAL FERRULE: 250 PSIG [17 BAR(G)] MAX: 500°F [260°C] MAX.
5. SEE INSTRUMENT MANUAL FOR ADDITIONAL INFORMATION AND INSTRUCTIONS.
4. ALL ORIENTATIONS AND/OR MOUNTING REFERENCES ARE INDICATED FROM TERMINAL ENCLOSURE END OF SENSING ELEMENT.
3. FOR ELECTRICAL OPTIONS, CONNECTIONS AND TESTS, SEE APPLICABLE WIRING DIAGRAM.
2. DIMENSIONS IN BRACKETS [ ] ARE IN MILLIMETERS.
1. THIS DRAWING IS A REFERENCE DOCUMENT ONLY.
NOTES: UNLESS OTHERWISE SPECIFIED

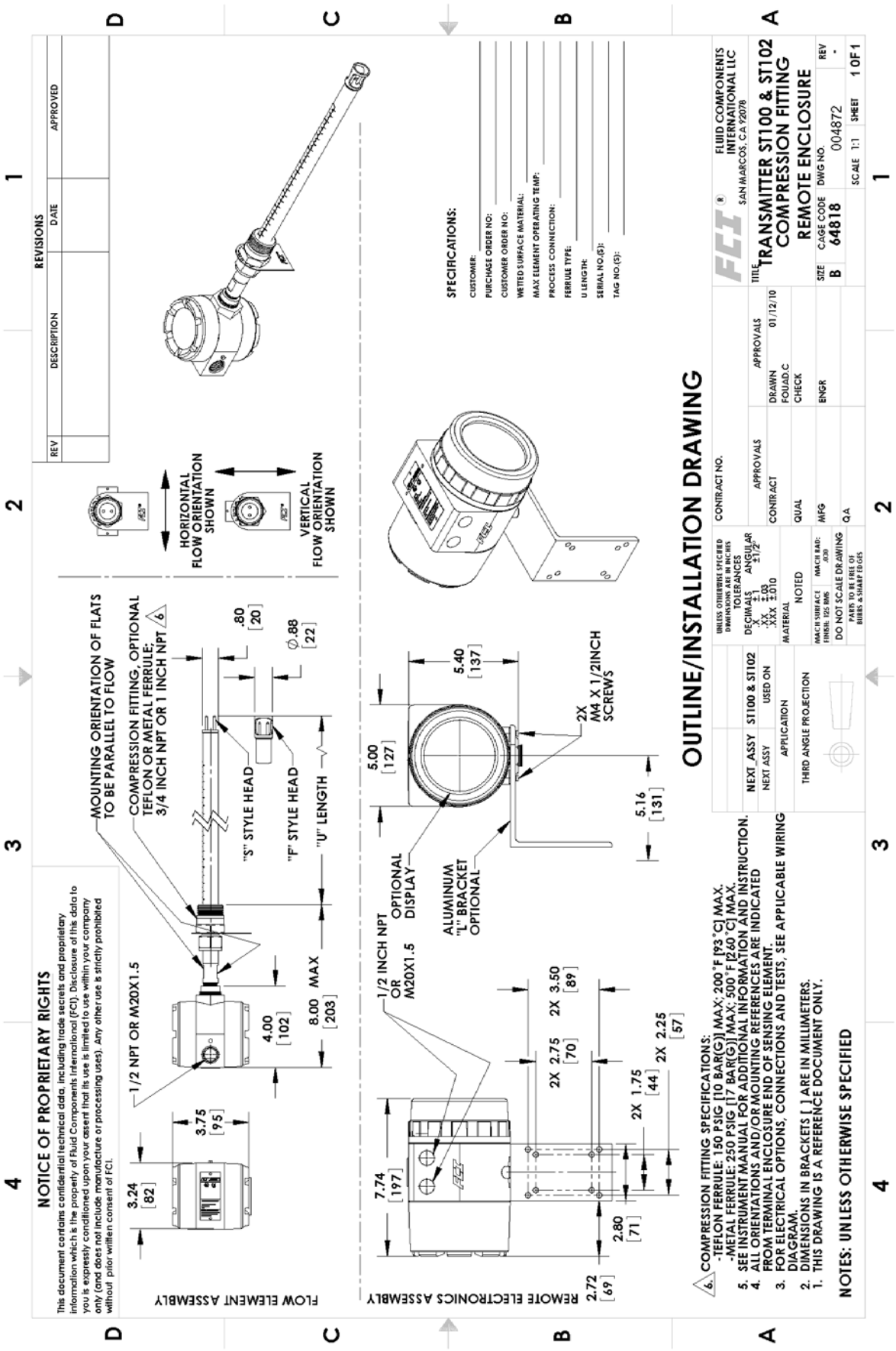
REVISIONS
REV
DESCRIPTION
DATE
APPROVED
HORIZONTAL FLOW ORIENTATION SHOWN
VERTICAL FLOW ORIENTATION SHOWN
SPECIFICATIONS:
CUSTOMER:
PURCHASE ORDER NO:
CUSTOMER ORDER NO:
WETTED SURFACE MATERIAL:
MAX ELEMENT OPERATING TEMP:
PROCESS CONNECTION:
FERRULE TYPE:
U LENGTH:
SERIAL NO.(S):
TAG NO.(S):
NOTICE OF PROPRIETARY RIGHTS
This document contains confidential technical data, including trade secrets and proprietary information which is the property of Fluid Components International (FCI). Disclosure of this data to you is expressly conditioned upon your assent that its use is limited to use within your company only (and does not include manufacture or processing uses). Any other use is strictly prohibited without prior written consent of FCI.
MOUNTING ORIENTATION OF FLATS TO BE PARALLEL TO FLOW
COMPRESSION FITTING, OPTIONAL TEFLON OR METAL FERRULE; 3/4 INCH NPT OR 1 INCH NPT
1/2 NPT OR M20X1.5
"S" STYLE HEAD
"F" STYLE HEAD
"U" LENGTH
3.24 [82]
3.75 [95]
4.00 [102]
8.00 MAX [203]
.80 [20]
Ø.88 [22]
FLOW ELEMENT ASSEMBLY
1/2 INCH NPT OR M20X1.5
OPTIONAL DISPLAY
ALUMINUM "L" BRACKET OPTIONAL
2X M4 X 1/2INCH SCREWS
5.00 [127]
5.40 [137]
5.16 [131]
7.74 [197]
2.72 [69]
2.80 [71]
2X 2.75 [70]
2X 3.50 [89]
2X 1.75 [44]
2X 2.25 [57]
REMOTE ELECTRONICS ASSEMBLY
OUTLINE/INSTALLATION DRAWING
CONTRACT NO.
APPROVALS
CONTRACT
QUAL
MFG
Q.A
DRAWN FOUAD.C 01/12/10
CHECK
ENGR
UNLESS OTHERWISE SPECIFIED DIMENSIONS ARE IN INCHES
TOLERANCES
DECIMALS .X ±1 .XX ±.03 .XXX ±.010
ANGULAR ±1/2°
MATERIAL NOTED
MACH SURFACE FINISH: 125 RMS
MACH RAD: .020
DO NOT SCALE DRAWING
PARTS TO BE FREE OF BURRS & SHARP EDGES
NEXT_ASSY ST100 & ST102
NEXT ASSY USED ON
APPLICATION
THIRD ANGLE PROJECTION
FCI®
FLUID COMPONENTS INTERNATIONAL LLC
SAN MARCOS, CA 92078
TITLE TRANSMITTER ST100 & ST102 COMPRESSION FITTING REMOTE ENCLOSURE
SIZE B
CAGE CODE 64818
DWG NO. 004872
REV -
SCALE 1:1
SHEET 1 OF 1
6. COMPRESSION FITTING SPECIFICATIONS:
-TEFLON FERRULE: 150 PSIG [10 BAR(G)] MAX; 200°F [93°C] MAX.
-METAL FERRULE: 250 PSIG [17 BAR(G)] MAX; 500°F [260°C] MAX.
5. SEE INSTRUMENT MANUAL FOR ADDITIONAL INFORMATION AND INSTRUCTION.
4. ALL ORIENTATIONS AND/OR MOUNTING REFERENCES ARE INDICATED FROM TERMINAL ENCLOSURE END OF SENSING ELEMENT.
3. FOR ELECTRICAL OPTIONS, CONNECTIONS AND TESTS, SEE APPLICABLE WIRING DIAGRAM.
2. DIMENSIONS IN BRACKETS [ ] ARE IN MILLIMETERS.
1. THIS DRAWING IS A REFERENCE DOCUMENT ONLY.
NOTES: UNLESS OTHERWISE SPECIFIED

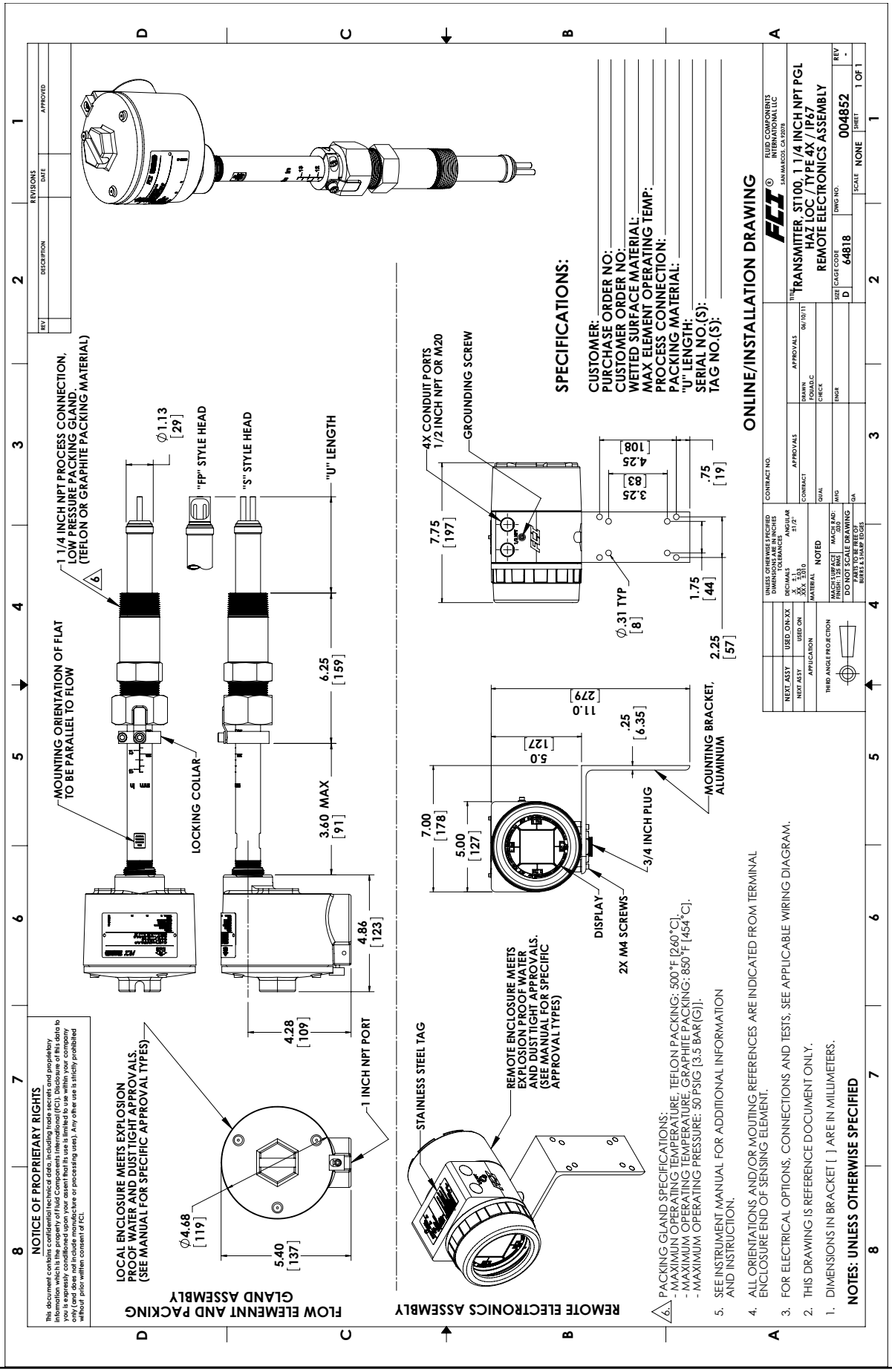
1 1/4 INCH NPT PROCESS CONNECTION, LOW PRESSURE PACKING GLAND. (TEFLON OR GRAPHITE PACKING MATERIAL)
MOUNTING ORIENTATION OF FLAT TO BE PARALLEL TO FLOW
LOCKING COLLAR
"FP" STYLE HEAD
"S" STYLE HEAD
"U" LENGTH
1 INCH NPT PORT
LOCAL ENCLOSURE MEETS EXPLOSION PROOF WATER AND DUST TIGHT APPROVALS. (SEE MANUAL FOR SPECIFIC APPROVAL TYPES)
FLOW ELEMENNT AND PACKING GLAND ASSEMBLY
STAINLESS STEEL TAG
REMOTE ENCLOSURE MEETS EXPLOSION PROOF WATER AND DUST TIGHT APPROVALS. (SEE MANUAL FOR SPECIFIC APPROVAL TYPES)
REMOTE ELECTRONICS ASSEMBLY
4X CONDUIT PORTS 1/2 INCH NPT OR M20
GROUNDING SCREW
DISPLAY
2X M4 SCREWS
3/4 INCH PLUG
MOUNTING BRACKET, ALUMINUM
SPECIFICATIONS:
CUSTOMER:
PURCHASE ORDER NO:
CUSTOMER ORDER NO:
WETTED SURFACE MATERIAL:
MAX ELEMENT OPERATING TEMP:
PROCESS CONNECTION:
PACKING MATERIAL:
"U" LENGTH:
SERIAL NO.(S):
TAG NO.(S):
ONLINE/INSTALLATION DRAWING
FCI FLUID COMPONENTS INTERNATIONAL LLC SAN MARCOS, CA 92078
TRANSMITTER, ST100, 1 1/4 INCH NPT PGL HAZ LOC / TYPE 4X / IP67 REMOTE ELECTRONICS ASSEMBLY
004852
64818
NOTES: UNLESS OTHERWISE SPECIFIED
1. DIMENSIONS IN BRACKET [ ] ARE IN MILLIMETERS.
2. THIS DRAWING IS REFERENCE DOCUMENT ONLY.
3. FOR ELECTRICAL OPTIONS, CONNECTIONS AND TESTS, SEE APPLICABLE WIRING DIAGRAM.
4. ALL ORIENTATIONS AND/OR MOUTING REFERENCES ARE INDICATED FROM TERMINAL ENCLOSURE END OF SENSING ELEMENT.
5. SEE INSTRUMENT MANUAL FOR ADDITIONAL INFORMATION AND INSTRUCTION.
6. PACKING GLAND SPECIFICATIONS:
- MAXIMUN OPERATING TEMPERATURE, TEFLON PACKING: 500°F [260°C].
- MAXIMUM OPERATING TEMPERATURE, GRAPHITE PACKING: 850°F [454°C].
- MAXIMUM OPERATING PRESSURE: 50 PSIG [3.5 BAR(G)].
NOTICE OF PROPRIETARY RIGHTS
This document contains confidential technical data including trade secret and proprietary information which is the property of Fluid Components International (FCI). Disclosure of this data to you is expressly conditioned upon your assent that its use is limited to use within your company only (and does not include manufacture or processing uses). Any other use is strictly prohibited without prior written consent of FCI.

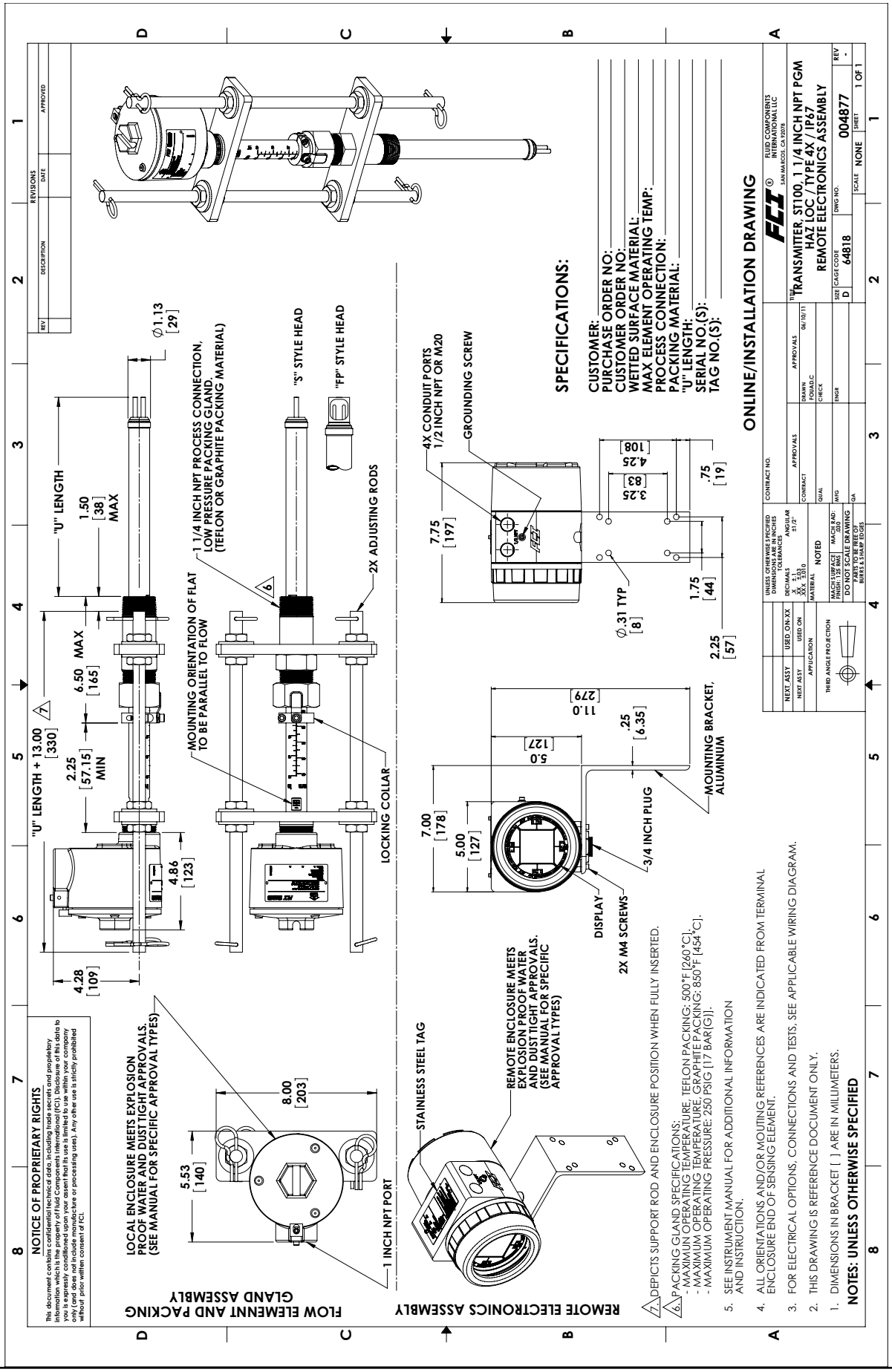
ONLINE/INSTALLATION DRAWING
FLUID COMPONENTS INTERNATIONAL LLC
SAN MARCOS, CA 92078
TRANSMITTER, ST100, 1 1/4 INCH NPT PGM
HAZ LOC / TYPE 4X / IP67
REMOTE ELECTRONICS ASSEMBLY
004877
64818
NONE
1 OF 1
SPECIFICATIONS:
CUSTOMER:
PURCHASE ORDER NO:
CUSTOMER ORDER NO:
WETTED SURFACE MATERIAL:
MAX ELEMENT OPERATING TEMP:
PROCESS CONNECTION:
PACKING MATERIAL:
"U" LENGTH:
SERIAL NO.(S):
TAG NO.(S):
"U" LENGTH
1.50 [38] MAX
"U" LENGTH + 13.00 [330]
2.25 [57.15] MIN
6.50 [165] MAX
4.86 [123]
4.28 [109]
Ø1.13 [29]
1 1/4 INCH NPT PROCESS CONNECTION, LOW PRESSURE PACKING GLAND. (TEFLON OR GRAPHITE PACKING MATERIAL)
MOUNTING ORIENTATION OF FLAT TO BE PARALLEL TO FLOW
"S" STYLE HEAD
"FP" STYLE HEAD
2X ADJUSTING RODS
LOCKING COLLAR
4X CONDUIT PORTS 1/2 INCH NPT OR M20
GROUNDING SCREW
7.75 [197]
3.25 [83]
4.25 [108]
.75 [19]
Ø.31 TYP [8]
1.75 [44]
2.25 [57]
11.0 [279]
5.0 [127]
.25 [6.35]
MOUNTING BRACKET, ALUMINUM
7.00 [178]
5.00 [127]
3/4 INCH PLUG
DISPLAY
2X M4 SCREWS
8.00 [203]
5.53 [140]
1 INCH NPT PORT
LOCAL ENCLOSURE MEETS EXPLOSION PROOF WATER AND DUST TIGHT APPROVALS. (SEE MANUAL FOR SPECIFIC APPROVAL TYPES)
STAINLESS STEEL TAG
REMOTE ENCLOSURE MEETS EXPLOSION PROOF WATER AND DUST TIGHT APPROVALS. (SEE MANUAL FOR SPECIFIC APPROVAL TYPES)
FLOW ELEMENT AND PACKING GLAND ASSEMBLY
REMOTE ELECTRONICS ASSEMBLY
7. DEPICTS SUPPORT ROD AND ENCLOSURE POSITION WHEN FULLY INSERTED.
6. PACKING GLAND SPECIFICATIONS:
- MAXIMUM OPERATING TEMPERATURE, TEFLON PACKING: 500°F [260°C].
- MAXIMUM OPERATING TEMPERATURE, GRAPHITE PACKING: 850°F [454°C].
- MAXIMUM OPERATING PRESSURE: 250 PSIG [17 BAR(G)].
5. SEE INSTRUMENT MANUAL FOR ADDITIONAL INFORMATION AND INSTRUCTION.
4. ALL ORIENTATIONS AND/OR MOUTING REFERENCES ARE INDICATED FROM TERMINAL ENCLOSURE END OF SENSING ELEMENT.
3. FOR ELECTRICAL OPTIONS, CONNECTIONS AND TESTS, SEE APPLICABLE WIRING DIAGRAM.
2. THIS DRAWING IS REFERENCE DOCUMENT ONLY.
1. DIMENSIONS IN BRACKET [ ] ARE IN MILLIMETERS.
NOTES: UNLESS OTHERWISE SPECIFIED
NOTICE OF PROPRIETARY RIGHTS
This document contains confidential technical data including trade secret and proprietary information which is the property of Fluid Components International (FCI). Disclosure of this data to you is expressly conditioned upon your assent that its use is limited to use within your company only (and does not include manufacture or processing uses). Any other use is strictly prohibited without prior written consent of FCI.
REVISIONS
REV DESCRIPTION DATE APPROVED
THIRD ANGLE PROJECTION
MATERIAL NOTED
APPLICATION
NEXT ASSY USED ON-XX
NEXT ASSY USED ON
DO NOT SCALE DRAWING
PARTS TO BE FREE OF BURRS & SHARP EDGES
DRAWN FQUAD.C 06/10/11
CONTRACT
QUAL
MFG
ENGR
QA
CONTRACT NO.
SIZE D
CAGE CODE
DWG NO.
SCALE
SHEET
REV -

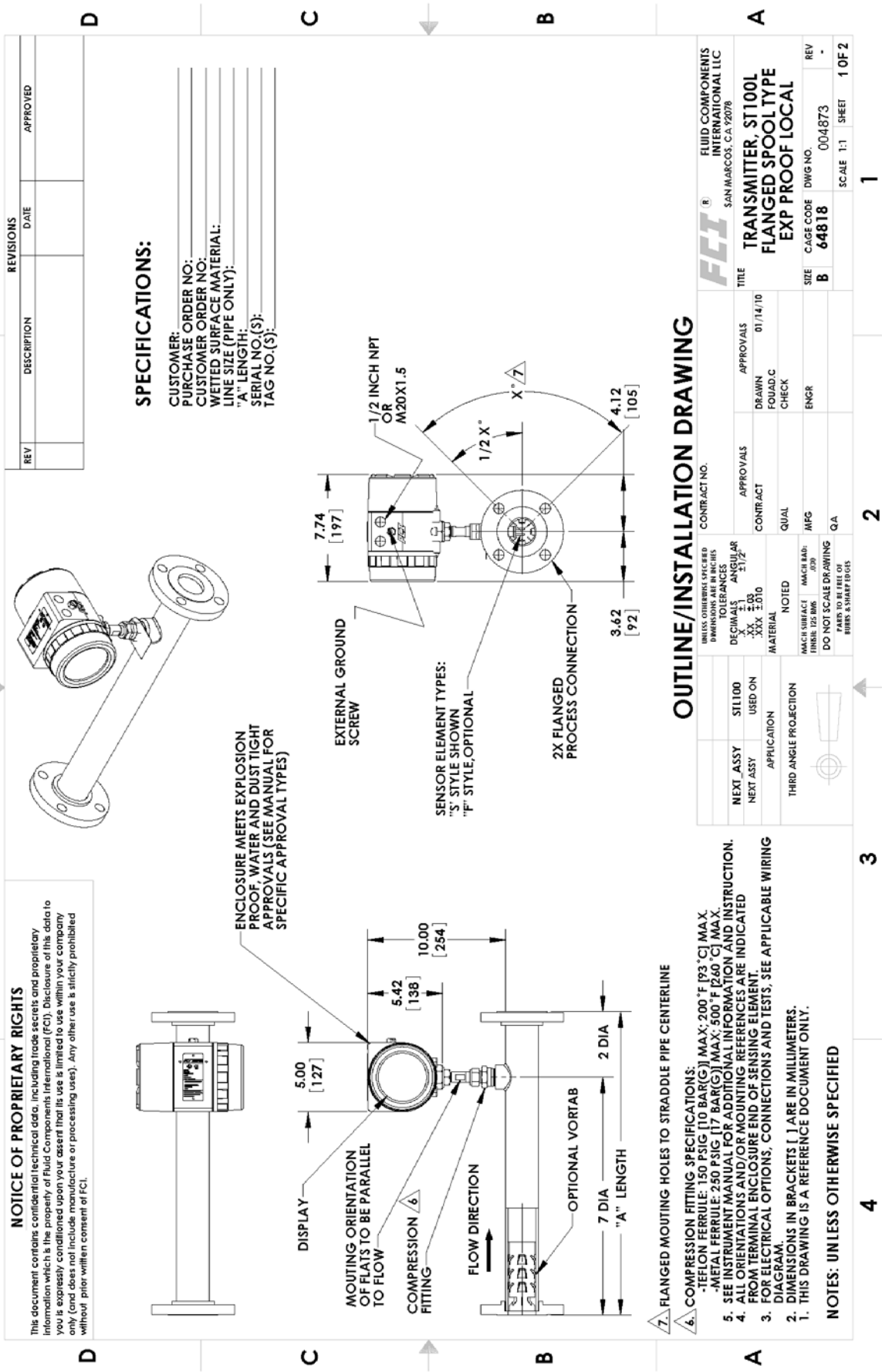
REVISIONS
REV
DESCRIPTION
DATE
APPROVED
SPECIFICATIONS:
CUSTOMER:
PURCHASE ORDER NO:
CUSTOMER ORDER NO:
WETTED SURFACE MATERIAL:
LINE SIZE (PIPE ONLY):
"A" LENGTH:
SERIAL NO.(S):
TAG NO.(S):
NOTICE OF PROPRIETARY RIGHTS
This document contains confidential technical data, including trade secrets and proprietary information which is the property of Fluid Components International (FCI). Disclosure of this data to you is expressly conditioned upon your assent that its use is limited to use within your company only (and does not include manufacture or processing uses). Any other use is strictly prohibited without prior written consent of FCI.
ENCLOSURE MEETS EXPLOSION PROOF, WATER AND DUST TIGHT APPROVALS (SEE MANUAL FOR SPECIFIC APPROVAL TYPES)
EXTERNAL GROUND SCREW
SENSOR ELEMENT TYPES: "S" STYLE SHOWN "P" STYLE,OPTIONAL
2X FLANGED PROCESS CONNECTION
1/2 INCH NPT OR M20X1.5
1/2 X°
X° 7
7.74 [197]
4.12 [105]
3.62 [92]
5.00 [127]
5.42 [138]
10.00 [254]
DISPLAY
MOUNTING ORIENTATION OF FLATS TO BE PARALLEL
COMPRESSION FITTING 6
FLOW DIRECTION
OPTIONAL VORTAB
7 DIA
2 DIA
"A" LENGTH
7. FLANGED MOUNTING HOLES TO STRADDLE PIPE CENTERLINE
6. COMPRESSION FITTING SPECIFICATIONS:
-TEFLON FERRULE: 150 PSIG [10 BAR(G)] MAX; 200 °F [93 °C] MAX.
-METAL FERRULE: 250 PSIG [17 BAR(G)] MAX; 500 °F [260 °C] MAX.
5. SEE INSTRUMENT MANUAL FOR ADDITIONAL INFORMATION AND INSTRUCTION.
4. ALL ORIENTATIONS AND/OR MOUNTING REFERENCES ARE INDICATED FROM TERMINAL ENCLOSURE END OF SENSING ELEMENT.
3. FOR ELECTRICAL OPTIONS, CONNECTIONS AND TESTS, SEE APPLICABLE WIRING DIAGRAM.
2. DIMENSIONS IN BRACKETS [ ] ARE IN MILLIMETERS.
1. THIS DRAWING IS A REFERENCE DOCUMENT ONLY.
NOTES: UNLESS OTHERWISE SPECIFIED
OUTLINE/INSTALLATION DRAWING
NEXT_ASSY ST100
NEXT ASSY USED ON
APPLICATION
THIRD ANGLE PROJECTION
UNLESS OTHERWISE SPECIFIED DIMENSIONS ARE IN INCHES
TOLERANCES
DECIMALS X ±1 XX ±.03 XXX ±.010
ANGULAR ±1/2°
MATERIAL NOTED
MACH SURFACE FINISH: 125 RMS
MACH RAD: .030
DO NOT SCALE DRAWING
PARTS TO BE FREE OF BURRS & SHARP EDGES
CONTRACT NO.
APPROVALS
CONTRACT
QUAL
MFG
QA
DRAWN 01/14/10
FOUAD.C
CHECK
ENGR
FCI
FLUID COMPONENTS INTERNATIONAL LLC
SAN MARCOS, CA 92078
TITLE
TRANSMITTER, ST100L FLANGED SPOOL TYPE EXP PROOF LOCAL
SIZE B
CAGE CODE 64818
DWG NO. 004873
REV -
SCALE 1:1
SHEET 1 OF 2

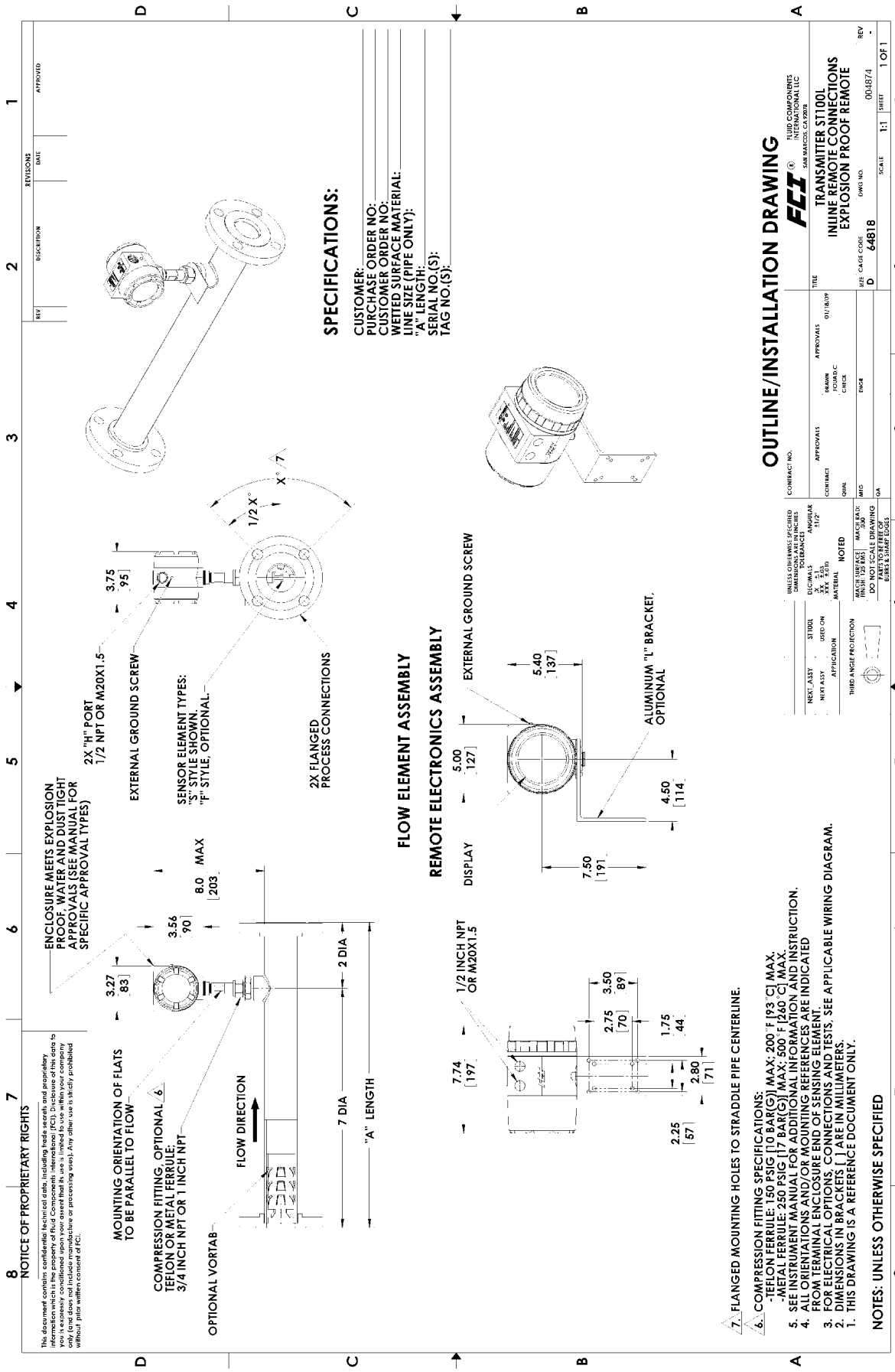
OUTLINE/INSTALLATION DRAWING
FCI
FLUID COMPONENTS INTERNATIONAL LLC
SAN MARCOS, CA 92078
TRANSMITTER ST100L
INLINE REMOTE CONNECTIONS
EXPLOSION PROOF REMOTE
SIZE CAGE CODE
D 64818
DWG NO. 004874
REV -
SCALE 1:1
SHEET 1 OF 1
SPECIFICATIONS:
CUSTOMER:
PURCHASE ORDER NO:
CUSTOMER ORDER NO:
WETTED SURFACE MATERIAL:
LINE SIZE (PIPE ONLY):
"A" LENGTH:
SERIAL NO.(S):
TAG NO.(S):
FLOW ELEMENT ASSEMBLY
REMOTE ELECTRONICS ASSEMBLY
ENCLOSURE MEETS EXPLOSION PROOF, WATER AND DUST TIGHT APPROVALS (SEE MANUAL FOR SPECIFIC APPROVAL TYPES)
2X "H" PORT 1/2 NPT OR M20X1.5
EXTERNAL GROUND SCREW
SENSOR ELEMENT TYPES: "S" STYLE SHOWN "F" STYLE, OPTIONAL
2X FLANGED PROCESS CONNECTIONS
MOUNTING ORIENTATION OF FLATS TO BE PARALLEL TO FLOW
COMPRESSION FITTING, OPTIONAL TEFLON OR METAL FERRULE: 3/4 INCH NPT OR 1 INCH NPT
OPTIONAL VORTAB
FLOW DIRECTION
"A" LENGTH
7 DIA
2 DIA
8.0 MAX
203
3.56
90
3.27
83
3.75
95
1/2 X°
X° /7
DISPLAY
EXTERNAL GROUND SCREW
ALUMINUM "L" BRACKET, OPTIONAL
1/2 INCH NPT OR M20X1.5
5.00
127
5.40
137
4.50
114
7.50
191
7.74
197
2.75
70
3.50
89
1.75
44
2.80
71
2.25
57
7. FLANGED MOUNTING HOLES TO STRADDLE PIPE CENTERLINE.
6. COMPRESSION FITTING SPECIFICATIONS:
-TEFLON FERRULE: 150 PSIG [10 BAR(G)] MAX: 200 °F [93 °C] MAX.
-METAL FERRULE: 250 PSIG [17 BAR(G)] MAX: 500 °F [260 °C] MAX.
5. SEE INSTRUMENT MANUAL FOR ADDITIONAL INFORMATION AND INSTRUCTION.
4. ALL ORIENTATIONS AND/OR MOUNTING REFERENCES ARE INDICATED FROM TERMINAL ENCLOSURE END OF SENSING ELEMENT.
3. FOR ELECTRICAL OPTIONS, CONNECTIONS AND TESTS, SEE APPLICABLE WIRING DIAGRAM.
2. DIMENSIONS IN BRACKETS [ ] ARE IN MILLIMETERS.
1. THIS DRAWING IS A REFERENCE DOCUMENT ONLY.
NOTES: UNLESS OTHERWISE SPECIFIED
NOTICE OF PROPRIETARY RIGHTS
This document contains confidential technical data, including trade secrets and proprietary information which is the property of Fluid Components International (FCI). Disclosure of this data to you is expressly conditioned upon your assent that its use is limited to use within your company only (and does not include manufacture or processing uses). Any other use is strictly prohibited without prior written consent of FCI.
REV
DISCRIPTION
DATE
APPROVED
REVISIONS

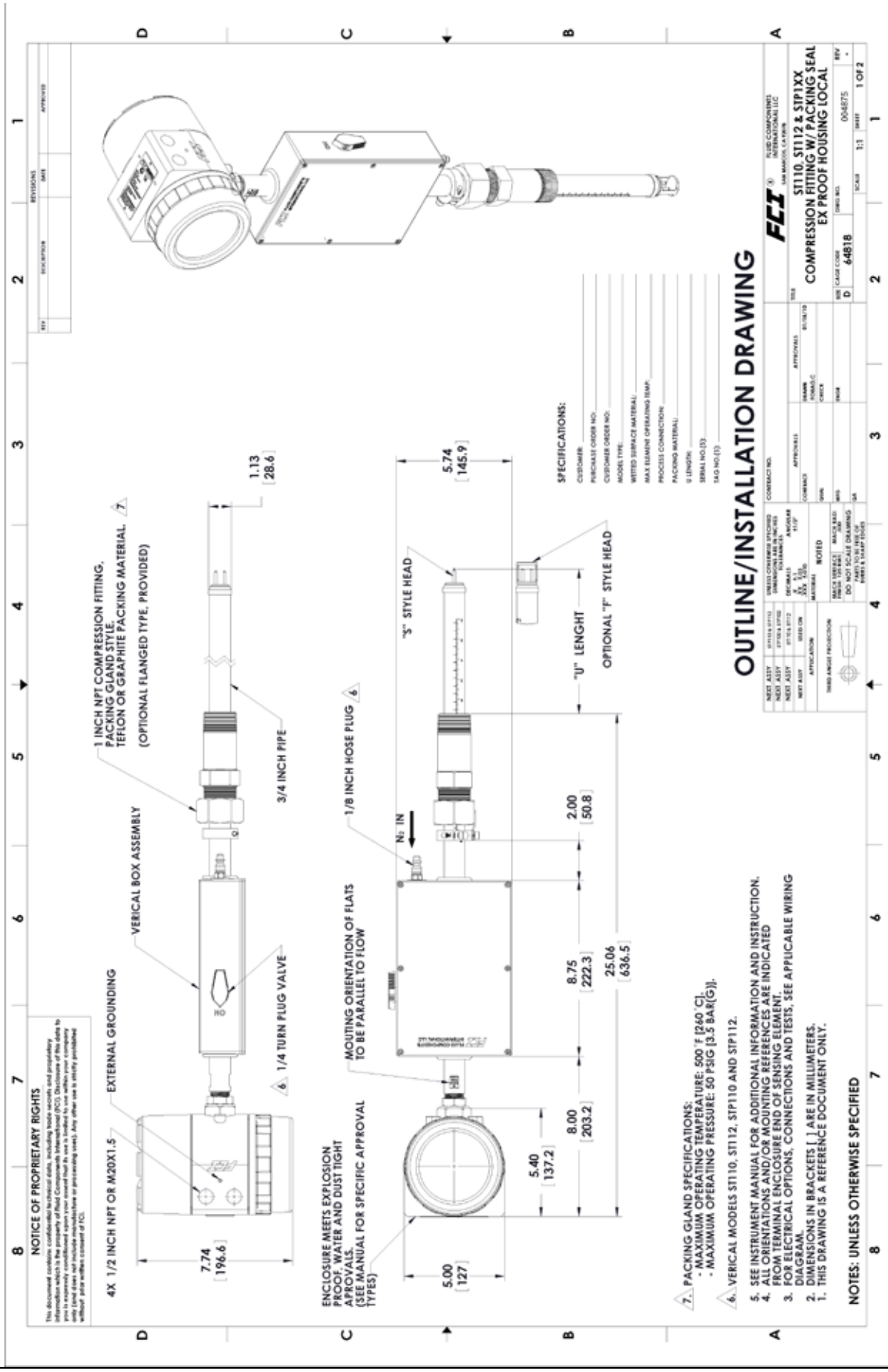
OUTLINE/INSTALLATION DRAWING
ST110, ST112 & STP1XX
COMPRESSION FITTING W/ PACKING SEAL
EX PROOF HOUSING LOCAL
64818
004875
1 OF 2
1 INCH NPT COMPRESSION FITTING, PACKING GLAND STYLE, TEFLON OR GRAPHITE PACKING MATERIAL. (OPTIONAL FLANGED TYPE, PROVIDED)
VERICAL BOX ASSEMBLY
EXTERNAL GROUNDING
4X 1/2 INCH NPT OR M20X1.5
1/4 TURN PLUG VALVE
3/4 INCH PIPE
1/8 INCH HOSE PLUG
MOUTING ORIENTATION OF FLATS TO BE PARALLEL TO FLOW
ENCLOSURE MEETS EXPLOSION PROOF, WATER AND DUST TIGHT APROVALS. (SEE MANUAL FOR SPECIFIC APPROVAL TYPES)
"S" STYLE HEAD
OPTIONAL "F" STYLE HEAD
"U" LENGHT
N2 IN
1.13 [28.6]
5.74 [145.9]
2.00 [50.8]
8.75 [222.3]
25.06 [636.5]
7.74 [196.6]
5.40 [137.2]
8.00 [203.2]
5.00 [127]
SPECIFICATIONS:
CUSTOMER:
PURCHASE ORDER NO:
CUSTOMER ORDER NO:
MODEL TYPE:
WETTED SURFACE MATERIAL:
MAX ELEMENT OPERATING TEMP:
PROCESS CONNECTION:
PACKING MATERIAL:
U LENGTH:
SERIAL NO.(S):
TAG NO.(S):
7. PACKING GLAND SPECIFICATIONS:
- MAXIMUM OPERATING TEMPERATURE: 500 °F [260 °C].
- MAXIMUM OPERATING PRESSURE: 50 PSIG [3.5 BAR(G)].
6. VERICAL MODELS ST110, ST112, STP110 AND STP112.
5. SEE INSTRUMENT MANUAL FOR ADDITIONAL INFORMATION AND INSTRUCTION.
4. ALL ORIENTATIONS AND/OR MOUNTING REFERENCES ARE INDICATED FROM TERMINAL ENCLOSURE END OF SENSING ELEMENT.
3. FOR ELECTRICAL OPTIONS, CONNECTIONS AND TESTS, SEE APPLICABLE WIRING DIAGRAM.
2. DIMENSIONS IN BRACKETS [ ] ARE IN MILLIMETERS.
1. THIS DRAWING IS A REFERENCE DOCUMENT ONLY.
NOTES: UNLESS OTHERWISE SPECIFIED
NOTICE OF PROPRIETARY RIGHTS

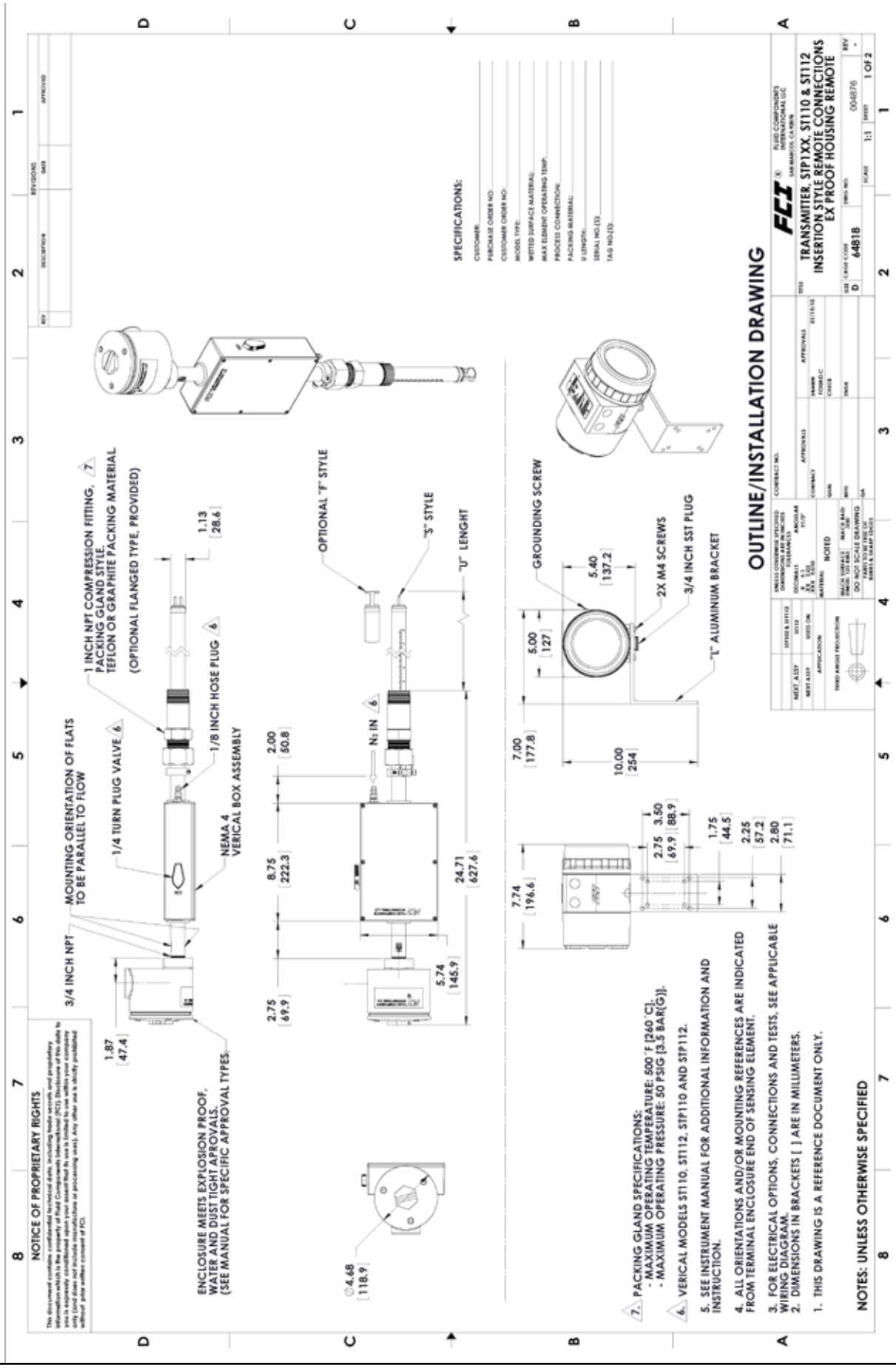
OUTLINE/INSTALLATION DRAWING
TRANSMITTER, STP1XX, ST110 & ST112
INSERTION STYLE REMOTE CONNECTIONS
EX PROOF HOUSING REMOTE
64818
004876
1 OF 2
SPECIFICATIONS:
CUSTOMER:
PURCHASE ORDER NO:
CUSTOMER ORDER NO:
MODEL TYPE:
WETTED SURFACE MATERIAL:
MAX ELEMENT OPERATING TEMP:
PROCESS CONNECTION:
PACKING MATERIAL:
U LENGTH:
SERIAL NO.(S):
TAG NO.(S):
1 INCH NPT COMPRESSION FITTING,
PACKING GLAND STYLE,
TEFLON OR GRAPHITE PACKING MATERIAL
(OPTIONAL FLANGED TYPE, PROVIDED)
1/8 INCH HOSE PLUG
1/4 TURN PLUG VALVE
MOUNTING ORIENTATION OF FLATS
TO BE PARALLEL TO FLOW
3/4 INCH NPT
NEMA 4
VERICAL BOX ASSEMBLY
ENCLOSURE MEETS EXPLOSION PROOF,
WATER AND DUST TIGHT APROVALS.
(SEE MANUAL FOR SPECIFIC APPROVAL TYPES)
OPTIONAL "F" STYLE
"S" STYLE
"U" LENGHT
N2 IN
GROUNDING SCREW
2X M4 SCREWS
3/4 INCH SST PLUG
"L" ALUMINUM BRACKET
1.87 [47.4]
1.13 [28.6]
2.00 [50.8]
8.75 [222.3]
2.75 [69.9]
5.74 [145.9]
24.71 [627.6]
5.00 [127]
5.40 [137.2]
7.00 [177.8]
10.00 [254]
7.74 [196.6]
2.75 [69.9]
3.50 [88.9]
1.75 [44.5]
2.25 [57.2]
2.80 [71.1]
Ø4.68 [118.9]
7. PACKING GLAND SPECIFICATIONS:
- MAXIMUM OPERATING TEMPERATURE: 500° F (260° C).
- MAXIMUM OPERATING PRESSURE: 50 PSIG (3.5 BAR(G)).
6. VERICAL MODELS ST110, ST112, STP110 AND STP112.
5. SEE INSTRUMENT MANUAL FOR ADDITIONAL INFORMATION AND INSTRUCTION.
4. ALL ORIENTATIONS AND/OR MOUNTING REFERENCES ARE INDICATED FROM TERMINAL ENCLOSURE END OF SENSING ELEMENT.
3. FOR ELECTRICAL OPTIONS, CONNECTIONS AND TESTS, SEE APPLICABLE WIRING DIAGRAM.
2. DIMENSIONS IN BRACKETS [ ] ARE IN MILLIMETERS.
1. THIS DRAWING IS A REFERENCE DOCUMENT ONLY.
NOTES: UNLESS OTHERWISE SPECIFIED
NOTICE OF PROPRIETARY RIGHTS

Intentionally Left Blank

APPENDIX B - WIRING DIAGRAMS

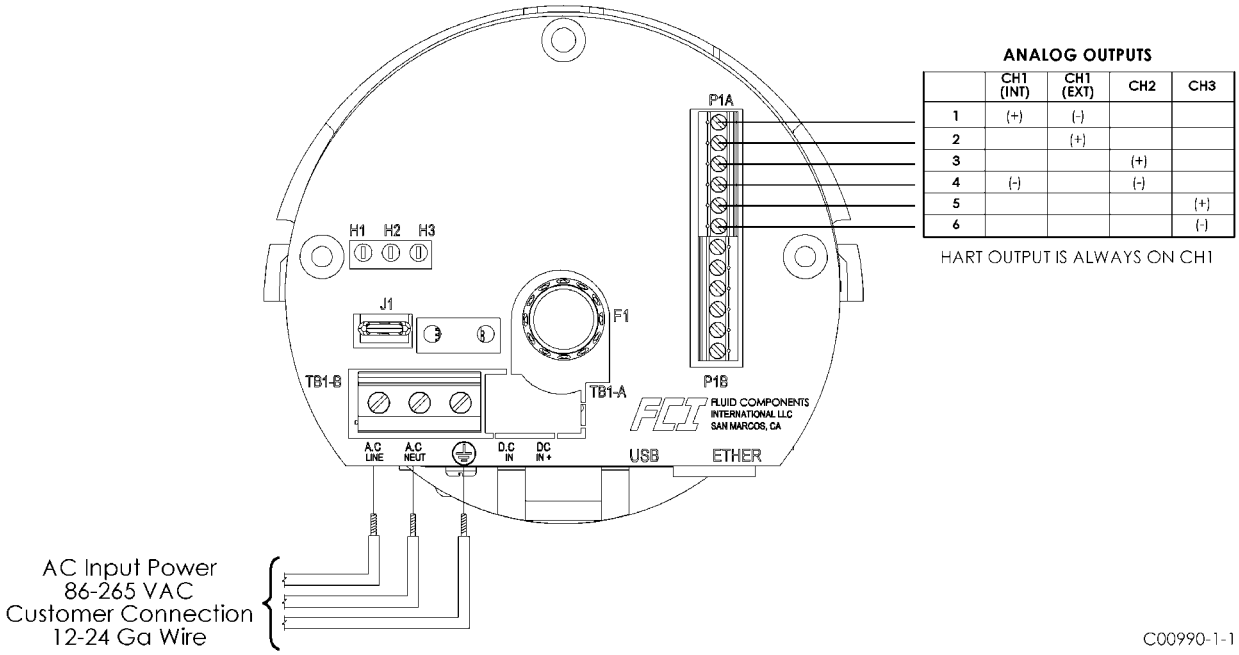

Figure B-1: Integral - AC Input Power, Analog and HART Output

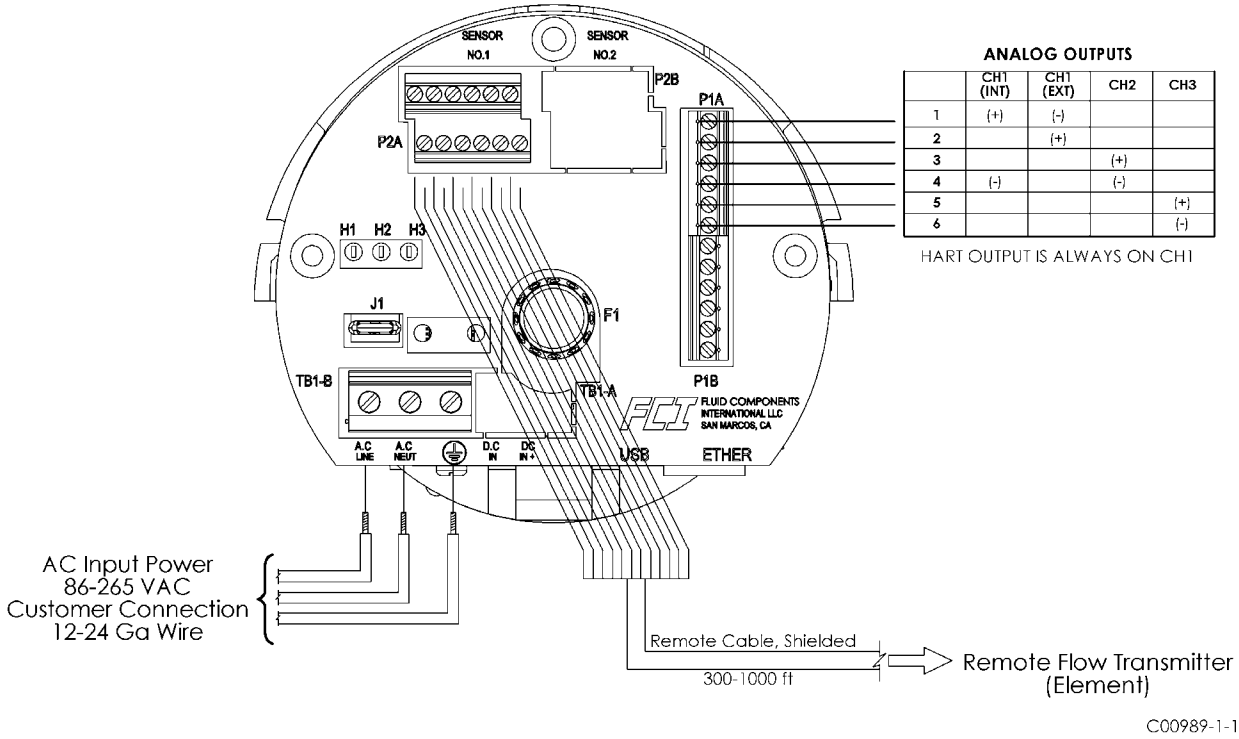

Figure B-2: Remote - AC Input Power, Analog and HART Output

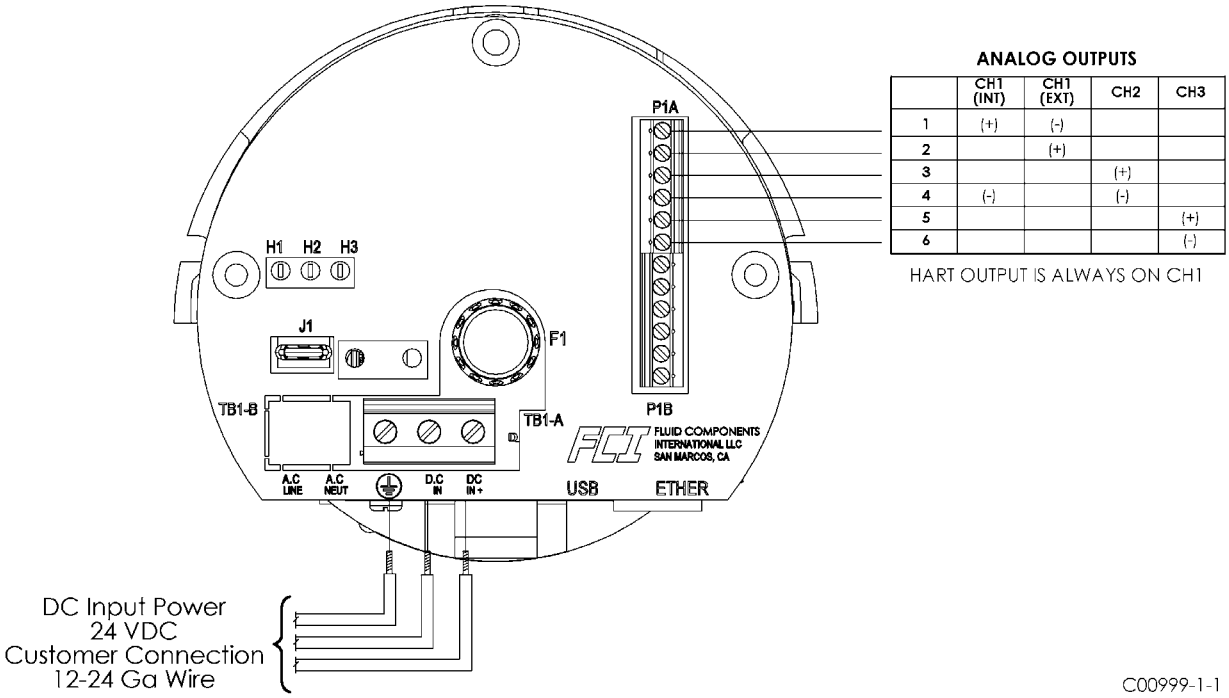

Figure B-3: Integral - DC Input Power, Analog and HART Output

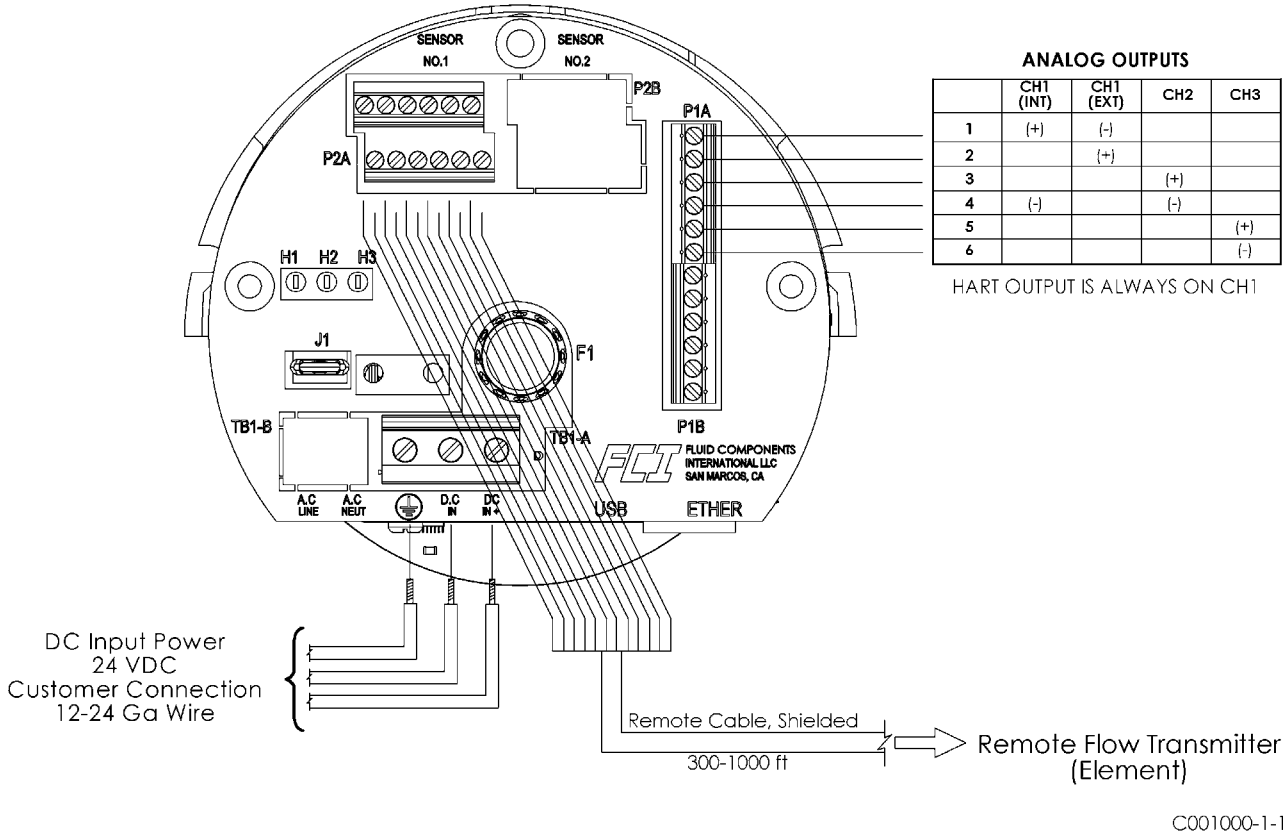

Figure B-4: Remote - DC Input Power, Analog and HART Output

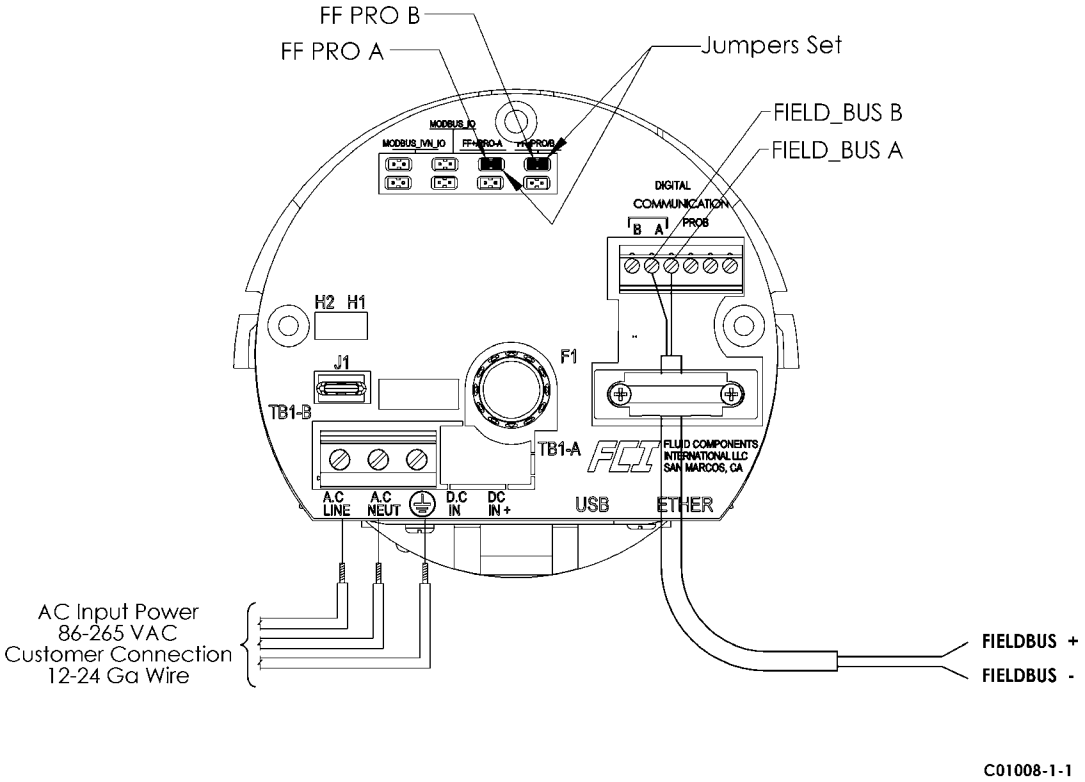

Figure B-5: Integral - AC Input Power, FOUNDATION fieldbus Output

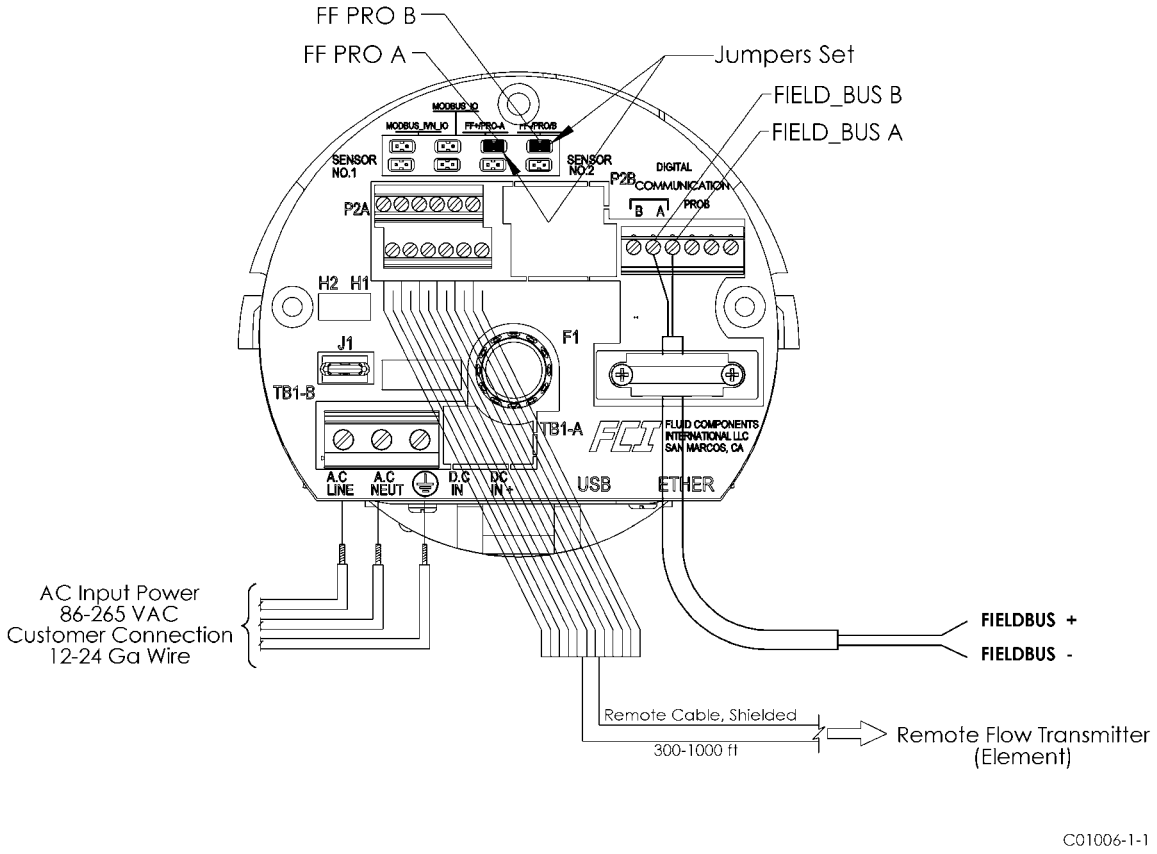

Figure B-6: Remote - AC Input Power, FOUNDATION fieldbus Output

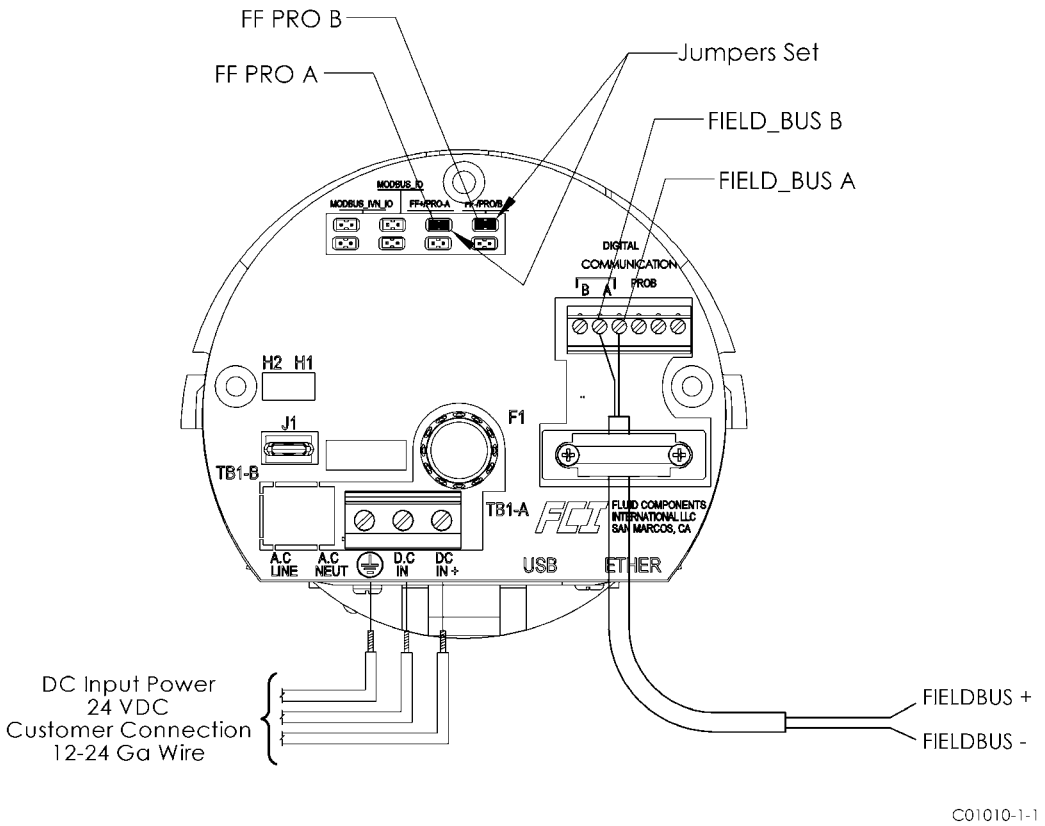

Figure B-7: Integral - DC Input Power, FOUNDATION fieldbus Output

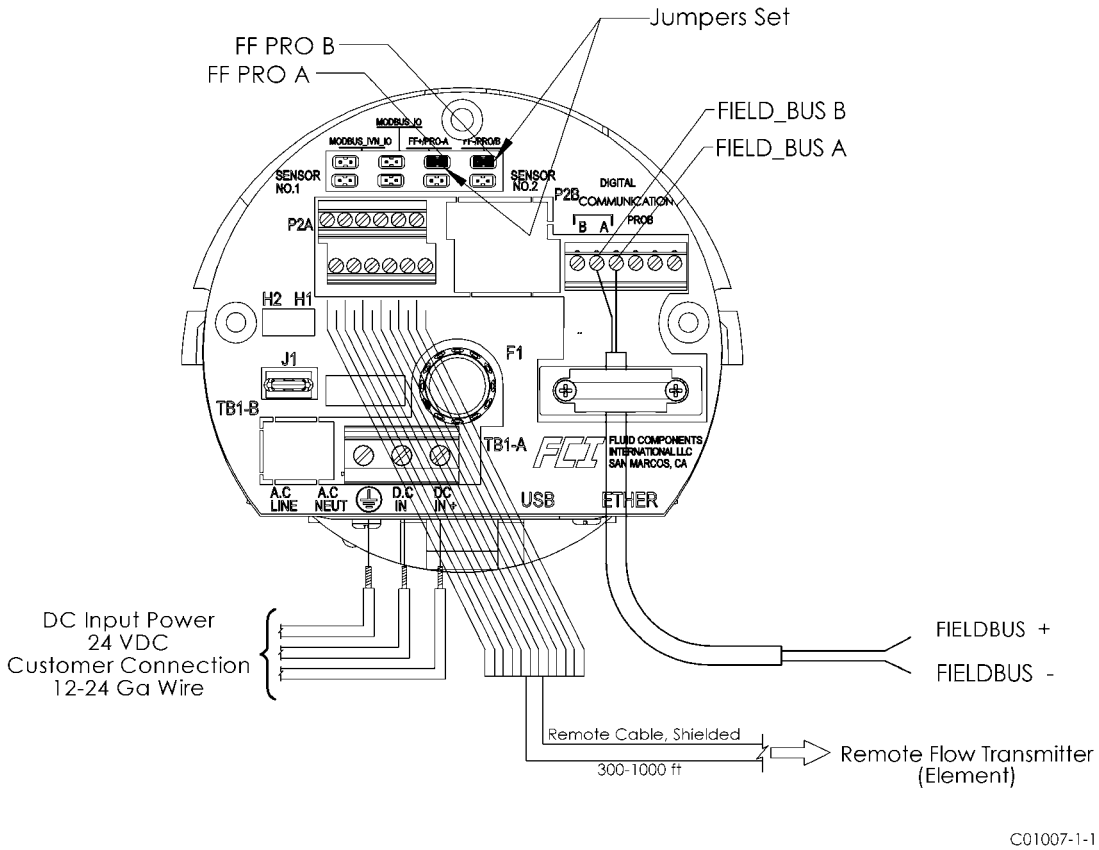

Figure B-8: Remote - DC Input Power, FOUNDATION fieldbus Output

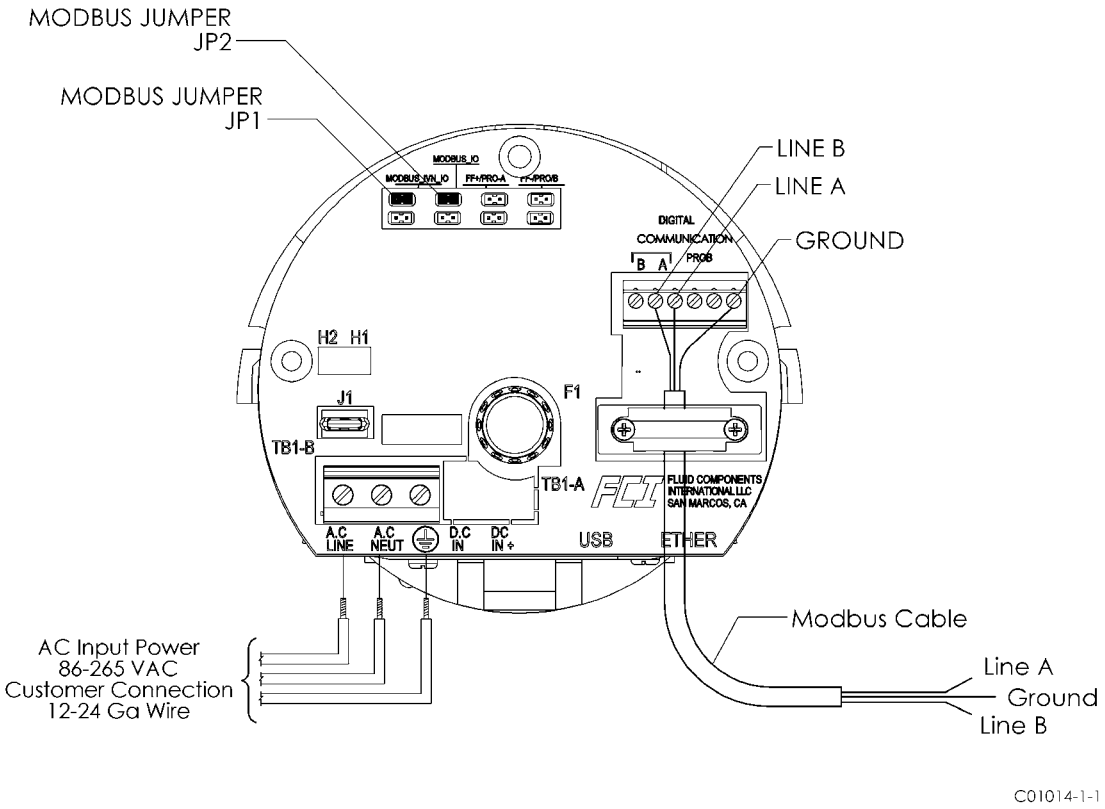

Figure B-9: Integral - AC Input Power, Modbus Output

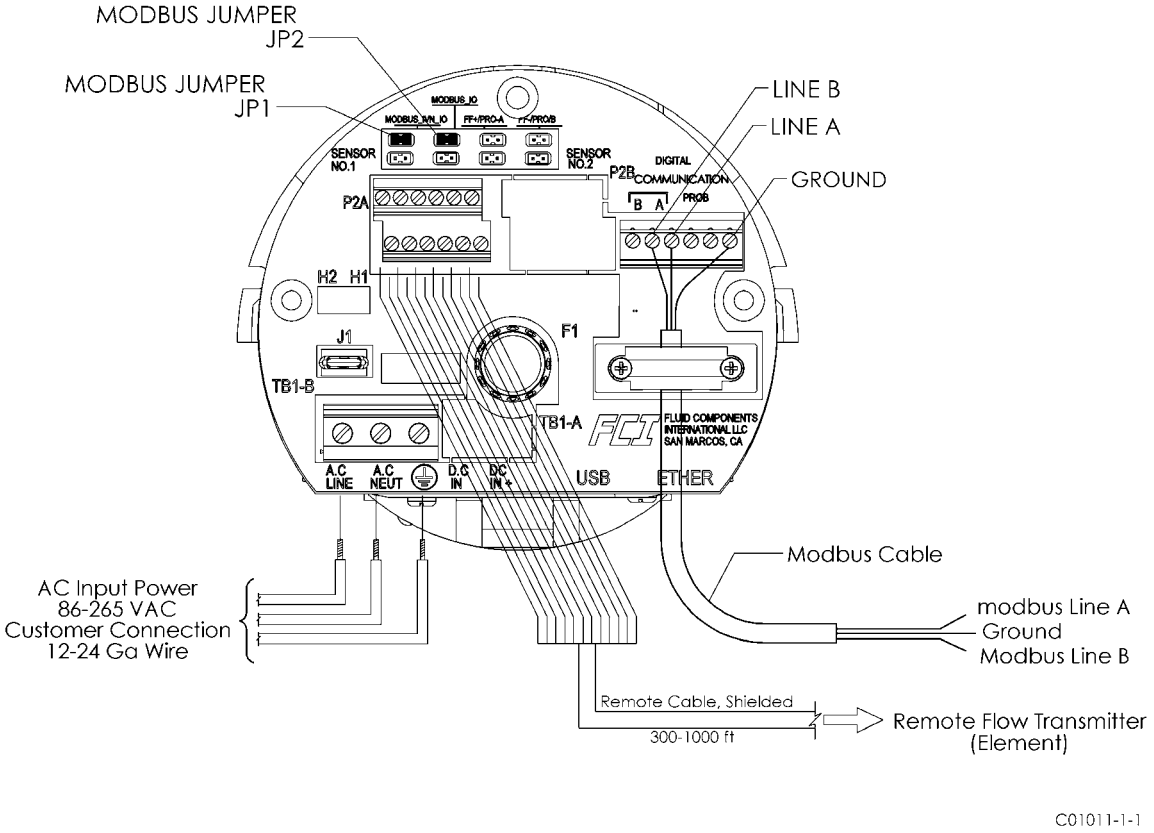

Figure B-10: Remote - AC Input Power, Modbus Output

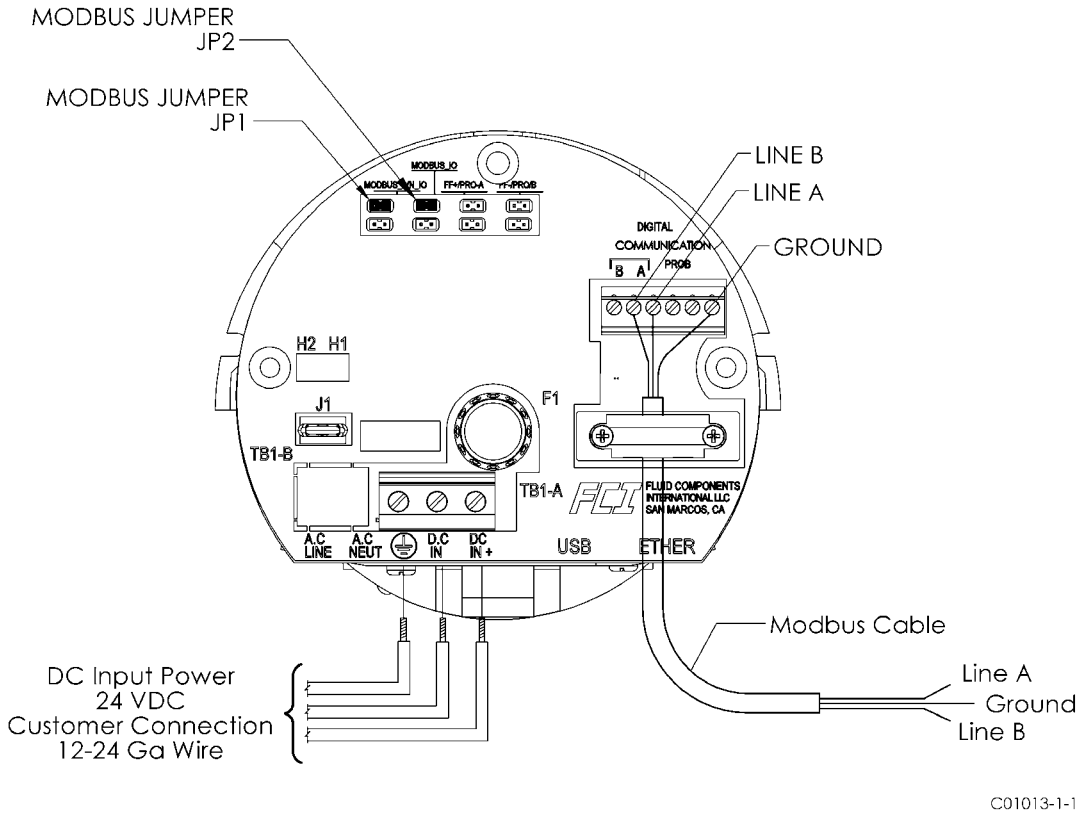

Figure B-11: Integral - DC Input Power, Modbus Output

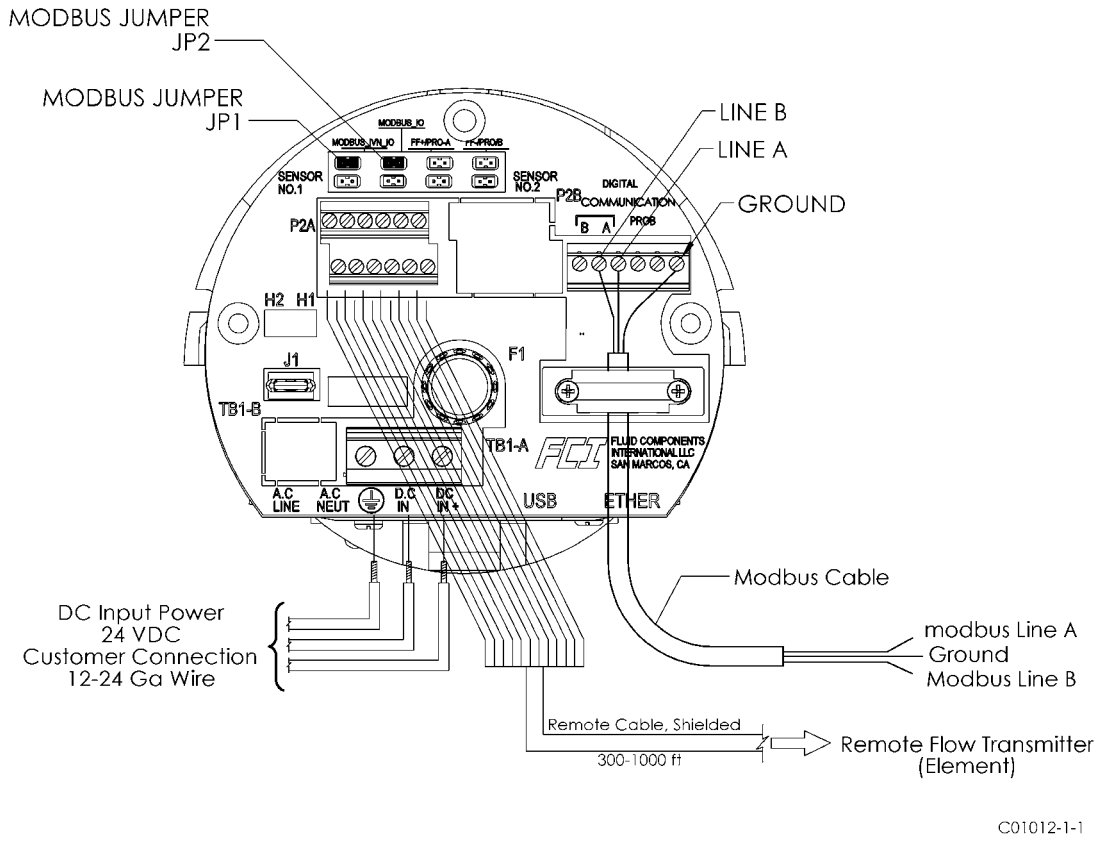

Figure B-12: Remote - DC Input Power, Modbus Output

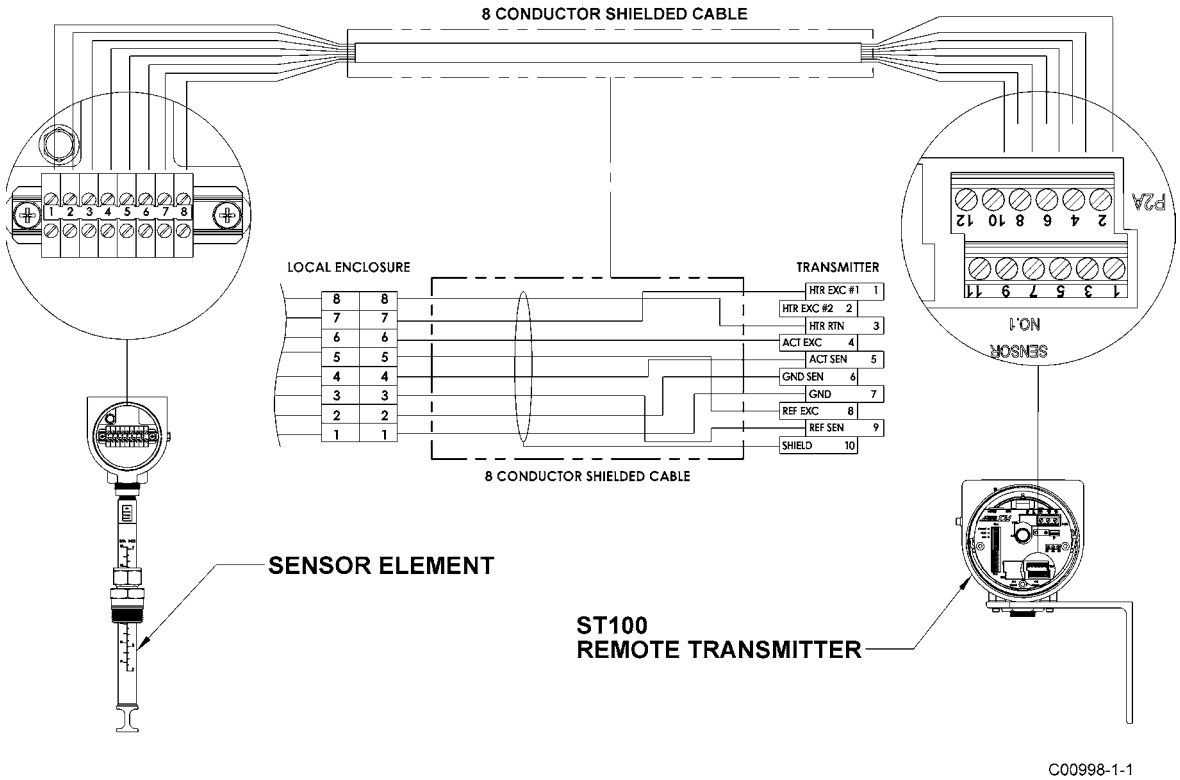

Figure B-13: Remote - 8 Conductor Interconnection Cable

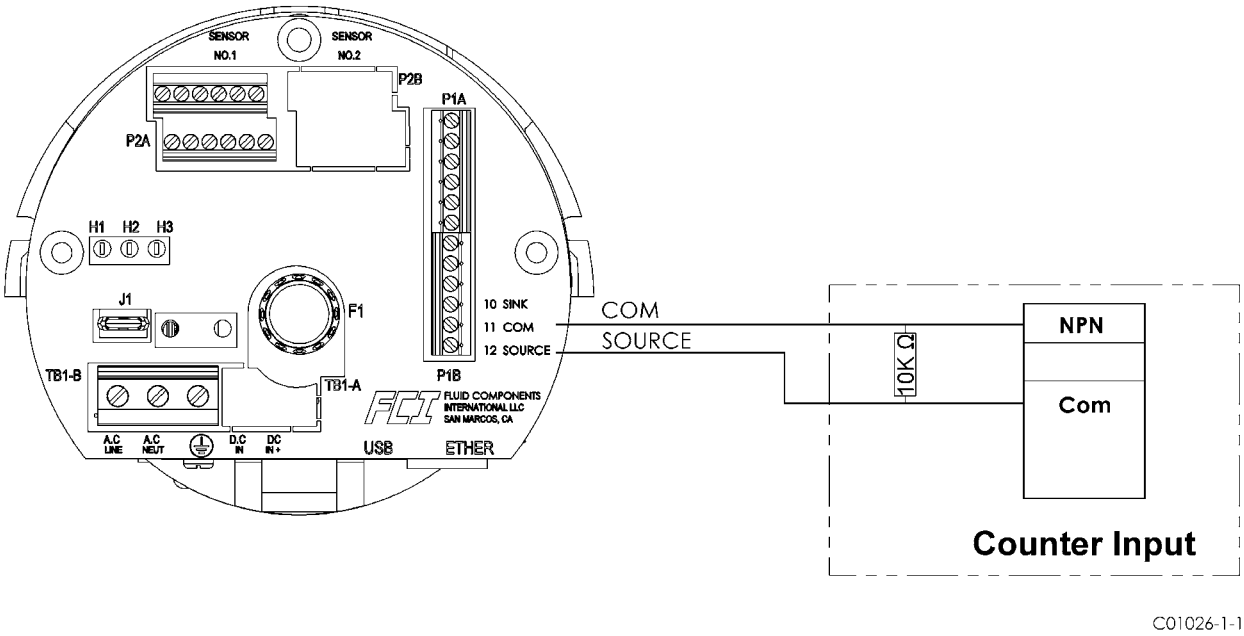

Figure B-14: Source - Pulse/Fequency Output

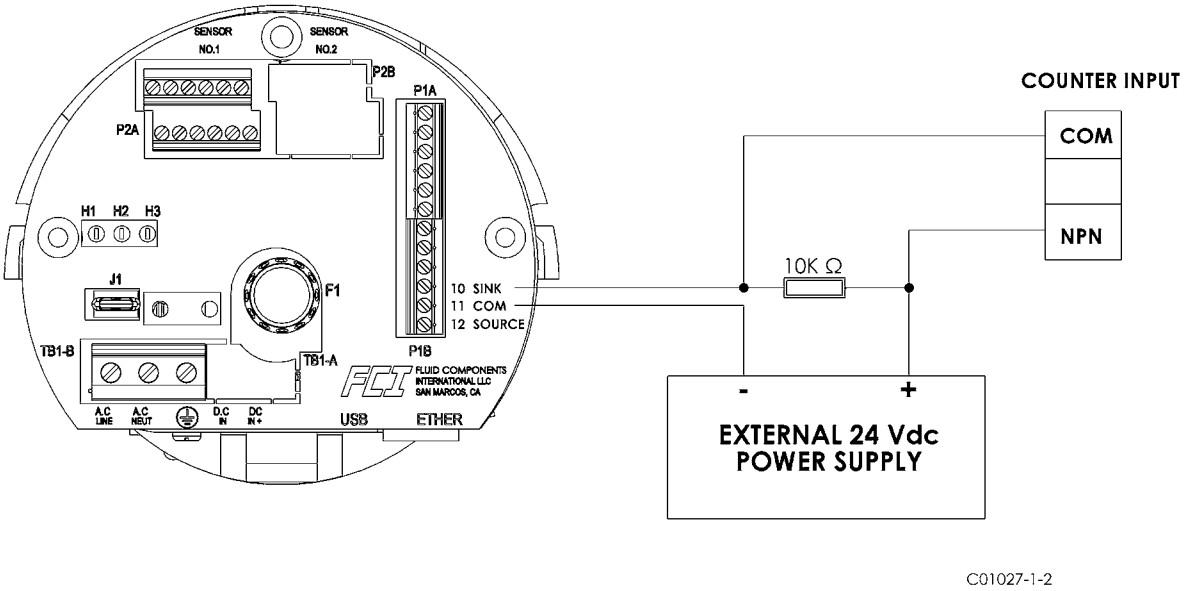

Figure B-15: Sink - Pulse/Fequency Output

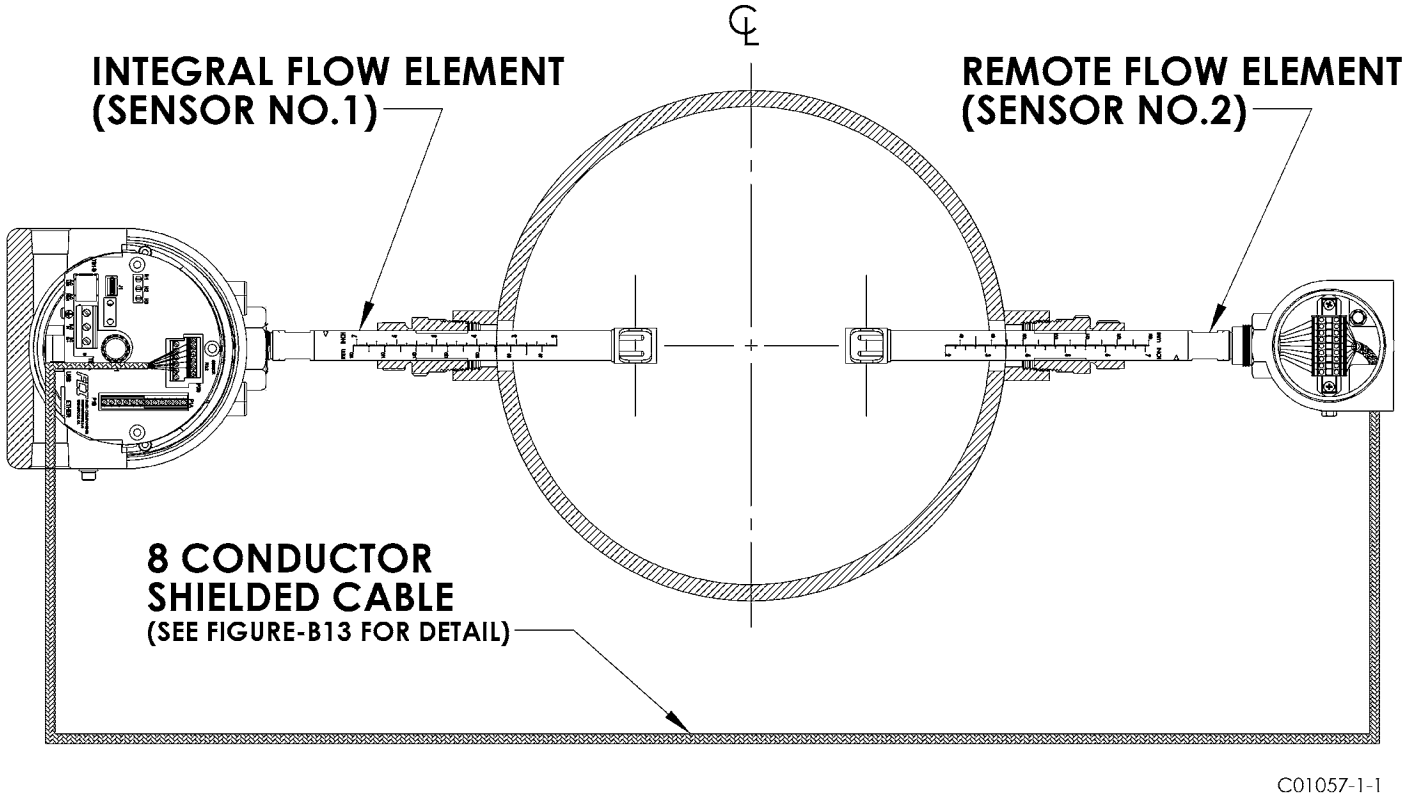

Figure B-16: Flow Element Connection - Integral/Remote

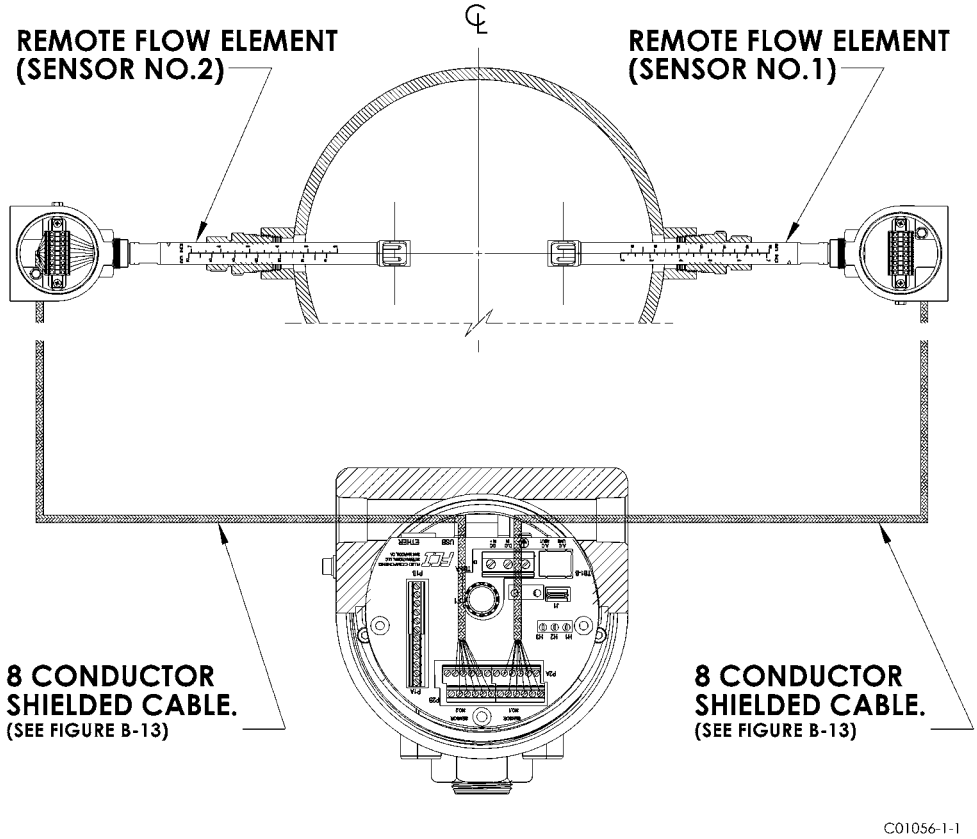

Figure B-17: Flow Element Connection - Remote

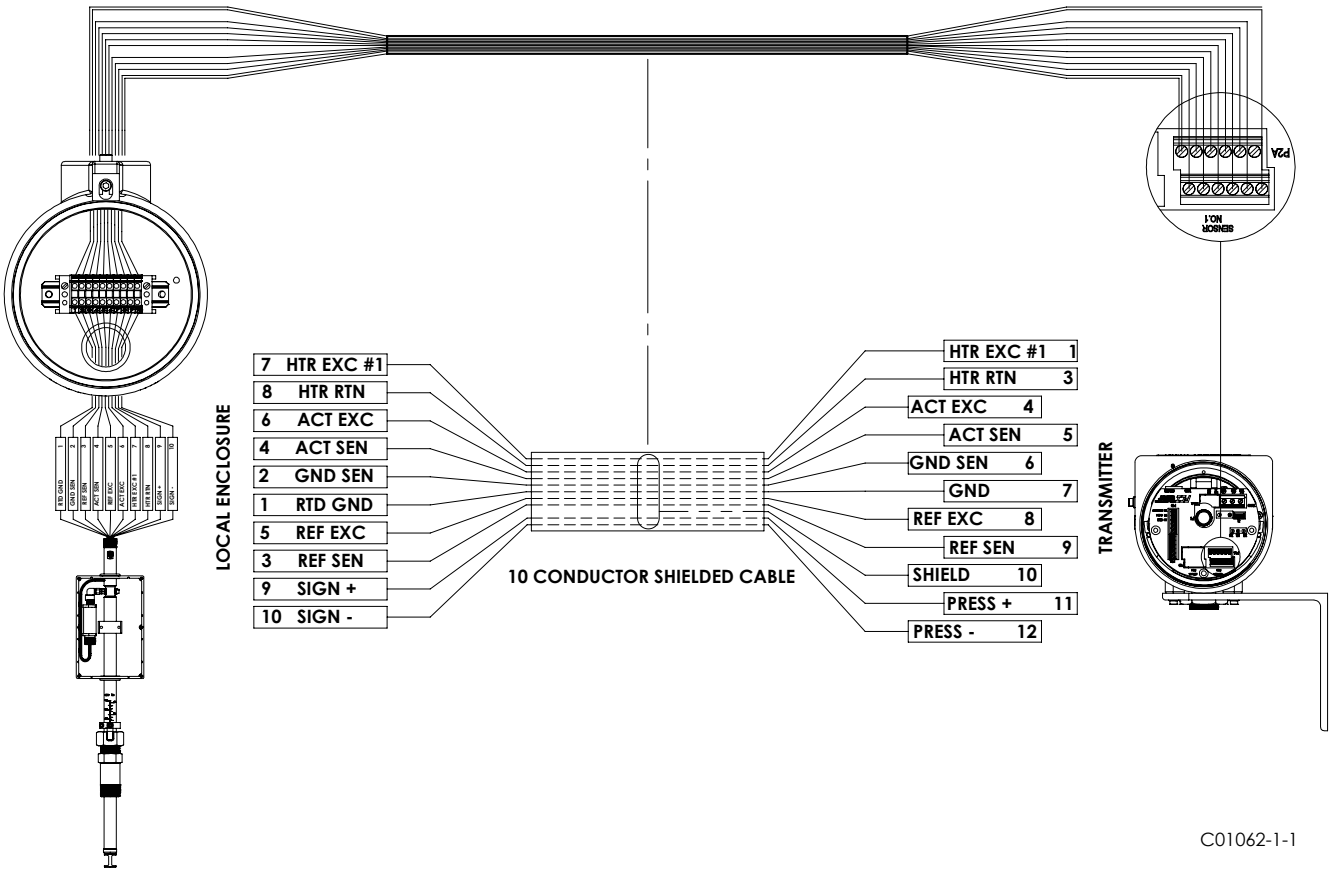

Figure B-18: Remote - 10 Conductor Interconnection Cable

APPENDIX C APPROVALS

EC DECLARATION OF CONFORMITY ST100 SERIES

We, *Fluid Components International LLC,* located at 1755 La Costa Meadows Drive, San Marcos, California 92078-5115 USA, declare under our sole responsibility that the **ST100 Flowmeter Product Family,** to which this declaration relates, is in conformity with the following directives and specifications.

Directive 94/9/EC ATEX
IECEx Scheme

Certified by FM Approvals LLC: 1151 Boston-Providence Turnpike, Norwood, MA 02062, USA

EC-Type Examination Certificates:

FM12ATEX0016X satisfies EN 60079-0: 2009, EN 60079-1: 2007, EN 60079-31: 2009,
EN 60529 1991+A1:2000 requirements for use in hazardous areas.

IECEx FMG 12 0003X satisfies IEC 60079-0: 2007-10, IEC 60079-1: 2007-04, IEC 60079-31: 2008 requirements for use in hazardous areas.

Hazardous Areas Approval FM12ATEX0016X / IECEx FMG 12 0003X for:
Category II 2 G Ex d IIC T6/T1 Gb Ta = -40ºC to +65ºC
Category II 2 D Ex tb IIIC T85ºC/ T450ºC Db Ta = -40ºC to +65ºC; IP67

Directive 2004/108/EC Electromagnetic Compatibility EMC

Immunity specification: EN 61000-6-2: 2005
Emissions specification: EN 61000-6-4: 2007

Directive 2006/95/EC Low Voltage

Electrical Safety Specification: EN 61010-1: 2001, 2nd Edition

Directive 97/23/EC Pressure Equipment

The ST100L Model is in conformity with the sound engineering practices as defined in article 3, paragraph of PED 97/23/EC.

Issued at San Marcos, California USA
26, September 2012

Eric Wible
2012.09.26 14:41:20 -07'00'

_____
Eric Wible, Engineering Manager

Flow/Liquid Level/Temperature Instrumentation
Visit FCI on the Worldwide Web: www.fluidcomponents.com
1755 La Costa Meadows Drive, San Marcos, California 92078 USA 760-744-6950 • 800-854-1993 • 760-736-6250
European Office: Persephonestraat 3-01 5047 TTTilburg – The Netherlands – Phone 31-13-5159989 • Fax 31-13-5799036

Doc no. 23EN000024A

FCI® FLUID COMPONENTS INTERNATIONAL, LLC
1755 La Costa Meadows Drive
San Marcos, CA 92078 USA

FM C US APPROVED

0344

CERT NO. FM12ATEX0016X
II 2 G Ex d IIC Gb T6/T1 Ta=-40°C TO +65°C
II 2 D Ex tb IIIC T85°C/T450°C Db Ta= -40°C TO +65°C; IP67

CERT NO. IECEx FMG12.0003X
Ex d IIC Gb T6/T1 Ta= -40°C TO +65°C
Ex tb IIIC T85°C/T450°C Db Ta= -40°C TO +65°C; IP67

XP CL I, DIV 1, GPS B, C, D
DIP CLII/III. DIV 1, GPS E, F, G
T6 Ta -40° C To 65° C
NI CL I, DIV 2, GPS A, B, C, D
NI CL II, DIV 2, GPS E, F, G
DIP CL III, DIV 1, DIV 2
T5 Ta -40° C TO 65°C
TYPE 4X IP 67
NEC 500

MODEL:

POWER INPUT:
WIRING DIAGRAM:
MAX PRESSURE:
SERIAL NUMBER:
DATE:
TAG NO :

POTENTIAL ELECTROSTATIC CHARGE HAZARD
-SEE MANUAL.
CAUTION:
DO NOT OPEN COVER IN AN EXPLOSIVE ATMOSPHERE.
ATTENTION:
NE PAS ENLEVER LE COUVERCLE DANS UNE ZONE POUVANT CONTENIR DES GAS EXPLOSIFS.
WARNING:
EXPLOSION HAZARD, DO NOT DISCONNECT EQUIPMENT WHEN FLAMMABLE OR COMBUSTIBLE ATMOSPHERE IS PRESENT.

ATTENTION:
DANGER D'EXPLOSION, NE PAS D'ÉBRANCHER L'APPAREIL S'IL YA PRÉSENCE DE GAZ INFLAMMABLE OU COMBUSTIBLE.
WARNING:
DISCONNECT POWER BEFORE REPLACING FUSE.
ATTENTION:
DÉBRANCHER L'ALIMENTATION AVANT DE REMPLACER LE FUSIBLE.

022479-01

TAG, UNIT CERTIFICATION, FM c,us, ATEX, IECEx

Safety Instructions for the use the ST100 Series flowmeter in Hazardous Areas
Approval FM12ATEX0016X/IECEx FMG12.0003X for:

Category II 2 G for Gas protection Ex d IIC T6…T1
Category II 2 D for Dust protection Ex tb IIIC T85ºC…T450ºC; IP67

The ST100 Series consist of a sensing element and associated integral or remote mounted electronics mounted in a type "d" flameproof enclosure.

Relation between ambient temperature, process temperature and temperature class is as follows:

Ambient temperature range (Ta): T6 [85ºC] for : -40ºC <Ta< + 65ºC

Process temperature range (Tp): T5 [T100ºC] for : -40ºC <Tp< + 65ºC
T4 [T135ºC] for : -40ºC <Tp< + 65ºC
T2 [T300ºC] for : -40ºC <Tp< + 177ºC
T1 [T450ºC] for : -40ºC <Tp< + 450ºC

Electrical data: Power supply: 85 to 265 VAC, 50/60 Hz, 13.1 Watt max; 24 VDC, 13.2 Watt Max

Dansk	Sikkerhedsforskrifter	Italiano	Normative di sicurezza
Deutsch	Sicherheitshinweise	Nederlands	Veiligheidsinstructies
English	Safety instructions	Português	Normas de segurança
Υπ	Υπ_δεί_εις ασφαλείας	Español	Instrucciones de seguridad
Suomi	Turvallisuusohjeet	Svenska	Säkerhetsanvisningar
Français	Consignes de sécurité		

DK Dansk- Sikkerhedsforskrifter

Disse sikkerhedsforskrifter gælder for Fluid Components, ST100 Series EF-typeafprøvningsattest-nr. FM12ATEX0016X/IECEx FMG12.0003X (attestens nummer på typeskiltet) er egnet til at blive benyttet i eksplosiv atmosfære kategori II 2 GD.
1) Ex-anlæg skal principielt opstilles af specialiseret personale.
2) ST100 Series skal jordforbindes.
3) Klemmerne og elektronikken er monteret i et hus, som er beskyttet af en eksplosionssikker kapsling med følgende noter:
• Gevindspalten mellem huset og låget er på en sådan måde, at ild ikke kan brede sig inden i det.
• Ex-„d" tilslutningshuset er forsynet med et 1/2" NPT og/eller M20x1.5 gevind for montering af en Ex-„d" kabelindføring, der er attesteret iht. IEC/EN 60079-1
• Det er vigtigt at sørge for, at forsyningsledningen er uden spænding eller eksplosiv atmosfære ikke er til stede, før låget åbnes og når låget er åbent på „d" huset (f.eks. ved tilslutning eller servicearbejde).
• Låget på „d" huset skal være skruet helt ind, når apparatet er i brug. Det skal sikres ved at dreje en af låseskruerne på låget ud.

D A Deutsch-Sicherheitshinweise

Diese Sicherheitshinweise gelten für die Fluid Components, ST100 Series flowmeter gemäß der EG-Baumusterprüfbescheinigung Nr. FM12ATEX0016X/IECEx FMG12.0003X (Bescheinigungsnummer auf dem Typschild) der Kategorie II 2 GD.
1) Die Errichtung von Ex-Anlagen muss grundsätzlich durch Fachpersonal vorgenommen werden.
2) Der ST100 Series muß geerdet werden.
3) Die Klemmen und Elektroniken sind in einem Gehäuse in der Zündschutzart druckfeste Kapselung („d") eingebaut.
• Der Gewindespalt zwischen dem Gehäuse und dem Deckel ist ein zünddurchschlagsicherer Spalt.
• Das Ex-"d" Anschlussgehäuse besitzt ein 1/2" NPT und/oder M20x1.5 Gewinde für den Einbau einer nach IEC/EN 60079-1 bescheinigten Ex-"d" Kabeleinführung.
• Es ist sicherzustellen, dass vor dem Öffnen und bei geöffnetem Deckel des „d" Gehäuses (z.B. bei Anschluss oder Service- Arbeiten) entweder die Versorgungsleitung spannungsfrei oder keine explosionsfähige Atmosphäre vorhanden ist.
• Der Deckel des „d" Gehäuses muss im Betrieb bis zum Anschlag hineingedreht sein. Er ist durch eine der Deckelarretierungsschrauben zu sichern.

GB IRL English- Safety instructions

These safety instructions are valid for the Fluid Components, ST100 Series flowmeter to the EC type approval certificate no FM12ATEX0016X/IECEx FMG12.0003X (certificate number on the type label) for use in potentially explosive atmospheres in Category II 2 GD.

1) The installation of Ex-instruments must be made by trained personnel.
2) The ST100 Series must be grounded.
3) The terminals and electronics are installed in a flame proof and pressure-tight housing with following notes:

• The gap between the housing and cover is an ignition-proof gap.
• The Ex-"d" housing connection has a 1/2" NPT and/or M20x1.5 cable entry for mounting an Ex-d cable entry certified acc. to IEC/EN 60079-1.
• Make sure that before opening the cover of the Ex"d" housing, the power supply is disconnected or there is no explosive atmosphere present (e.g. during connection or service work).
• During normal operation: The cover of the "d" housing must be screwed in completely and locked by tightening one of the cover locking screws.

GR Υπ_δεί_εις ασφαλείας

Αυτές οι οδηγίες ασφαλείας ισχύουν για τα Ροόμετρα της Fluid Components τύπου ST100 Series που φέρουν Πιστοποιητικό Εγκρίσεως Ευρωπαϊκής Ένωσης, με αριθμό πιστοποίησης FM12ATEX0016X/IECEx FMG12.0003X (ο αριθμός πιστοποίησης βρίσκεται πάνω στην ετικέτα τύπου του οργάνου) για χρήση σε εκρηκτικές ατμόσφαιρες της κατηγορίας II 2 GD.

1) Η εγκατάσταση των οργάνων με αντιεκρηκτική προστασία πρέπει να γίνει από εξειδικευμένο προσωπικό.
2) Το όργανο τύπου ST100 Series πρέπει να είναι γειωμένο.
3) Τα τερματικά ηλεκτρικών συνδέσεων (κλέμες) και τα ηλεκτρονικά κυκλώματα είναι εγκατεστημένα σε περίβλημα αντιεκρηκτικό και αεροστεγές σύμφωνα με τις ακόλουθες παρατηρήσεις:

• Το κενό ανάμεσα στο περίβλημα και στο κάλυμμα είναι τέτοιο που αποτρέπει την διάδοση σπινθήρα.
• Το "Ex-d" αντιεκρηκτικό περίβλημα, έχει ανοίγματα εισόδου καλωδίου με διάμετρο ½" NPT ή/και M20x1.5, κατάλληλα για τοποθέτηση υποδοχής αντιεκρηκτικού καλωδίου πιστοποιημένης κατά IEC/EN 60079-1
• Βεβαιωθείτε ότι πριν το άνοιγμα καλύμματος του του "Ex-d" αντιεκρηκτικού περιβλήματος, η τάση τροφοδοσίας είναι αποσυνδεδεμένη ή ότι δεν υφίσταται στη περιοχή εκρηκτική ατμόσφαιρα (π.χ. κατά τη διάρκεια της σύνδεσης ή εργασιών συντήρησης)
• Κατά τη διάρκεια ομαλής λειτουργίας: Το κάλυμα του "d" καλύμματος αντιεκρηκτικού περιβλήματος πρέπει να είναι εντελώς βιδωμένο και ασφαλισμένο, σφίγγοντας μία από τις βίδες ασφαλείας του περιβλήματος.

FIN Suomi - Turvallisuusohjeet

Nämä turvallisuusohjeet koskevat Flud Components, ST100 Series EY-tyyppitarkastustodistuksen nro. FM12ATEX0016X/IECEx FMG12.0003X (todistuksen numero näkyy tyyppikilvestä) käytettäessä räjähdysvaarallisissa tiloissa luokassa II 2GD.

1) Ex-laitteet on aina asennettava ammattihenkilökunnan toimesta.
2) ST100 Series on maadoitettava.
3) Syöttöjännitteen kytkemisessä tarvittavat liittimet ja elektroniikka on asennettu koteloon jonka rakenne kestää räjähdyspaineen seuraavin lisäyksin :

• Kotelon ja kannen välissä on räjähdyksen purkausväli.
• Ex-d liitäntäkotelossa on 1/2" NPT ja/tai M20x1.5 kierre IEC/EN 60079-1 mukaisen Ex-d kaapeliläpiviennin asennusta varten
• Kun "d"-kotelon kansi avataan (esim. liitännän tai huollon yhteydessä), on varmistettava, että joko syöttöjohto on jännitteetön tai ympäristössä ei ole räjähtäviä aineita.
• "d" -kotelon kansi on kierrettävä aivan kiinni käytön yhteydessä ja on varmistettava kiertämällä yksi kannen lukitusruuveista kiinni.

F B L Consignes de sécurité

Ces consignes de sécurité sont valables pour le modèle ST100 Series de la société Fluid Components (FCI) conforme au certificat d'épreuves de type FM12ATEX0016X/IECEx FMG12.0003X (numéro du certificat sur l'étiquette signalétique) conçu pour les applications dans lesquelles un matériel de la catégorie II2GD est nécessaire.
1) Seul un personnel spécialisé et qualifié est autorisé à installer le matériel Ex.
2) Les ST100 Series doivent être reliés à la terre.
3) Les bornes pour le branchement de la tension d'alimentation et l'électronique sont logées dans un boîtier à enveloppe antidéflagrante
avec les notes suivantes :
• Le volume entre le boîtier et le couvercle est protégé en cas d'amorçage.
• Le boîtier de raccordement Ex-d dispose d'un filetage1/2'' NPT et/ou M20x1.5 pour le montage d'un presse-étoupe Ex-d certifié selon la IEC/EN 60079-1.
• Avant d'ouvrir le couvercle du boîtier « d » et pendant toute la durée où il le restera (pour des travaux de raccordement, d'entretien ou de dépannage par exemple), il faut veiller à ce que la ligne d'alimentation soit hors tension ou à ce qu'il n'y ait pas d'atmosphère explosive.
• Pendant le fonctionnement de l'appareil, le couvercle du boîtier « d » doit être vissé et serré jusqu'en butée. La bonne fixation du couvercle doit être assurée en serrant une des vis d'arrêt du couvercle.

I Italiano - Normative di sicurezza

Queste normative di sicurezza si riferiscono ai Fluid Components, ST100 Series secondo il certificato CE di prova di omologazione n° FM12ATEX0016X/IECEx FMG12.0003X (numero del certificato sulla targhetta d'identificazione) sono idonei all'impiego in atmosfere esplosive applicazioni che richiedono apparecchiature elettriche della Categoria II 2 GD.
1) L'installazione di sistemi Ex deve essere eseguita esclusivamente da personale specializzato.
2) I ST100 Series devono essere collegati a terra.
3) I morsetti per il collegamento e l'elettronica sono incorporati in una custodia a prova di esplosione („d") con le seguenti note:
• La sicurezza si ottiene grazie ai cosidetti „interstizi sperimentali massimi", attraverso i quali
una eventuale accensione all'interno della custodia non può propagarsi all'esterno oraggiungere altre parti dell'impianto.
• La scatola di collegamento Ex-d ha una filettatura 3/4" e/o 1" NPT per il montaggio di un passacavo omologato Ex-d secondo IEC/EN 60079-1.
• Prima di aprire il coperchio della custodia „d" (per es. durante operazioni di collegamento o di manutenzione) accertarsi che l'apparecchio sia disinserito o che non si trovi in presenza di atmosfere esplosive.
• Avvitare il coperchio della custodia „d" fino all'arresto. Per impedire lo svitamento del coperchio é possibile allentare una delle 2 viti esagonali poste sul corpo della custodia, incastrandola nella sagoma del coperchio.

NL B Nederlands - Veiligheidsinstructies

Deze veiligheidsinstructies gelden voor de Fluid Components, ST100 Series overeenkomstig de EG-typeverklaring nr. FM12ATEX0016X/IECEx FMG12.0003X (nummer van de verklaring op het typeplaatje) voor gebruik in een explosieve atmosfeer volgens Categorie II 2GD.
1) Installatie van Ex-instrumenten dient altijd te geschieden door geschoold personeel.
2) De ST100 Series moet geaard worden.
3) De aansluitklemmen en de electronika zijn ingebouwd in een drukvaste behuizing met de volgende opmerkingen:
• De schroefdraadspleet tussen de behuizing en de deksel is een ontstekingsdoorslagveilige
spleet.
• De Ex-d aansluitbehuizing heeft een 1/2" of een M20x1.5 schroefdraad voor aansluiting van een volgens IEC/EN 60079-1 goedgekeurde Ex- 'd' kabelinvoer.
• Er moet worden veilig gesteld dat vóór het openen bij een geopende deksel van de 'd' behuizing (bijv. bij aansluit- of servicewerkzaamheden) hetzij de voedingsleiding spanningsvrij is, hetzij geen explosieve atmosfeer aanwezig is.
• De deksel van de 'd' behuizing moet tijdens bedrijf tot aan de aanslag erin geschroefd zijn.
Hij moet door het eruit draaien van een van de dekselborgschroeven worden geborgd.

P Português - Normas de segurança

Estas normas de segurança são válidas para os Fluid Components, ST100 Series conforme o certificado de teste de modelo N.º FM12ATEX0016X/IECEx FMG12.0003X (número do certificado na plaqueta com os dados do equipamento) são apropriados para utilização em atmosferas explosivas categoria II 2 GD.
1) A instalação de equipamentos em zonas sujeitas a explosão deve, por princípio, ser executada por técnicos qualificados.
2) Os ST100 Series Flexmasster precisam ser ligados à terra.
3) Os terminais e a electrónica para a conexão da tensão de alimentação estão instalados num envólucro com protecção contra ignição á prova de sobrepressão com as seguintes notas :
• A fenda entre o envólucro e a tampa deve ser á prova de passagem de centelha.
• O envólucro de conexão Ex-“d“ possui uma rosca 1/2“ NPT e/ou M20x1.5 para a entrada de cabos Ex-“d“ certificado conforme a norma IEC/EN 60079-1.
• Deve-se assegurar que, antes de abrir a tampa do armário „d“ (por exemplo, ao efectuar a conexão ou durante trabalhos de manutenção), o cabo de alimentação esteja sem tensão ou que a atmosfera não seja explosíva.
• Durante a operação, a tampa do envólucro „d“ deve estar aparafusada até o encosto. A tampa deve ser bloqueada, por um dos parafusos de fixação.

E Español - Instrucciones de seguridad

Estas indicaciones de seguridad son de aplicación para el modelo ST100 Series de Fluid Components, según la certificación CE de modelo Nº FM12ATEX0016X/IECEx FMG12.0003X para aplicaciones en atmósferas potencialmente explosivas según la categoría II 2 GD (el número decertificación se indica sobre la placa informativa del equipo).
1) La instalación de equipos Ex tiene que ser realizada por personal especializado.
2) Los ST100 Series tienen que ser conectados a tierra.
3) Los bornes de conexión y la unidad electrónica están montados dentro de una caja con protección antideflagrante y resistente a presión, considerándose los siguientes puntos:
• La holgura entre la rosca de la tapa y la propia de la caja está diseñada a prueba contra ignición.
• La caja tiene conexiones eléctricas para entrada de cables con rosca 1/2” NPTy/o M20x1.5, donde deberán conectarse prensaestopas certificados Exd según IEC/EN60079-1.
• Antes de la apertura de la tapa de la caja "Exd“ (p. ej. durante los trabajos de conexionado o de puesta en marcha) hay que asegurar que el equipo se halle sin tensión o que no exista presencia de atmósfera explosiva.
• Durante el funcionamiento normal: la tapa de la caja antideflagrante tiene que estar cerrada, roscada hasta el tope, debiendose asegurar apretando los tornillos de bloqueo.

S Svenska - Säkerhetsanvisningar

Säkerhetsanvisningarna gäller för Fluid Components, Flödesmätare typ ST100 Series enligt EG-typkontrollintyg nr FM12ATEX0016X/IECEx FMG12.0003X (intygsnumret återfinns på typskylten) är lämpad för användning i explosiv gasblandning i kategori II 2 GD.
1) Installation av Ex- klassade instrument måste alltid utföras av fackpersonal.
2) ST100 Series måste jordas.
3) Anslutningsklämmorna och elektroniken är inbyggda i en explosions och trycktät kapsling med följande kommentar:
• Spalten mellan kapslingen och lockets gänga är flamsäker.
• Ex-d kapslingen har en 1/2“ NPT och / eller M20x1.5 gänga för montering av en IEC/EN 60079-1 typkontrollerad Ex- „d“ kabel förskruvning
• När Ex- „d“-kapslingens lock är öppet (t.ex. vid inkoppling - eller servicearbeten) ska man se till att enheten är spänningslös eller att ingen explosiv gasblandning förekommer.
• Under drift måste Ex - d“-kapslingens lock vara iskruvad till anslaget. För att säkra locket skruvar man i en av lockets insex låsskruvar.

APPENDIX D CUSTOMER SERVICE

Customer Service/ Technical Support

FCI provides full in-house technical support. Additional technical representation is also provided by FCI field representatives. Before contacting a field or in-house representative, please perform the troubleshooting techniques outlined in this document.

By Mail

Fluid Components International LLC

1755 La Costa Meadows Dr.

San Marcos, CA 92078-5115 USA

Attn: Customer Service Department

By Phone

Contact the area FCI regional representative. If a field representative is unable to be contacted or if a situation is unable to be resolved, contact the FCI Customer Service Department toll free at 1 (800) 854-1993.

By Fax

To describe problems in a graphical or pictorial manner, send a fax including a phone or fax number to the regional representative. Again, FCI is available by facsimile if all possibilities have been exhausted with the authorized factory representative. Our Fax number is 1 (760) 736-6250; it is available 7 days a week, 24 hours a day.

By E-Mail

FCI Customer Service can be contacted by e-mail at: techsupport@fluidcomponents.com.

Describe the problem in detail making sure a telephone number and best time to be contacted is stated in the e-mail.

International Support

For product information or product support outside the contiguous United States, Alaska, or Hawaii, contact your country's FCI International Representative or the one nearest to you.

After Hours Support

For product information visit FCI at www.fluidcomponents.com. For product support call 1 (800) 854-1993 and follow the prerecorded instructions.

Point of Contact

The point of contact for service, or return of equipment to FCI is your authorized FCI sales/service office. To locate the office nearest you, please go to www.fluidcomponents.com.

Warranty Repairs or Returns

FCI prepays ground transportation charges for return of freight to the customer's door. FCI reserves the right to return equipment by the carrier of our choice.

International freight, handling charges, duty/entry fees for return of equipment are paid by the customer.

Non-Warranty Repairs or Returns

FCI returns repaired equipment to the customer either collect or prepaid and adds freight charges to the customer invoice.

Extended Warranty

An extended warranty is available. Please contact the factory for information.

Return to Stock Equipment

The customer is responsible for all shipping and freight charges for equipment that is returned to FCI stock from the customer site. These items will not be credited to the customer's account until all freight charges are cleared, along with applicable return to stock charges, from the credit invoice. (Exceptions are made for duplicate shipments made by FCI.)

If any repair or return equipment is received at FCI, freight collect, without prior factory consent, FCI bills the sender for these charges.

Field Service Procedures

Contact an FCI field representative to request field service.

A field service technician is dispatched to the site from either the FCI factory or one of the FCI representative offices. After the work is complete, the technician completes a preliminary field service report at the customer site and leaves a copy with the customer.

Following the service call, the technician completes a formal, detailed service report. The formal report is mailed to the customer after the technician's return to the factory or office.

Field Service Rates

All field service calls are billed at the prevailing rates as listed in the FCI Price Book unless previous arrangements have been made with the FCI Customer Service Manager.

Customers are charged for all travel expenses including airfare, auto rental, meals and lodging. In addition, the customer shall pay all costs of transporting parts, tools or goods to and from the job site. Invoicing travel time, field service work and other expenses will be performed by FCI's Accounting Department.

FLUID COMPONENTS INTERNATIONAL LLC

1755 La Costa Meadows Drive, San Marcos, CA 92078-5115 USA
760-744-6950 / 800-854-1993 / Fax: 760-736-6250
Web Site: www.fluidcomponents.com
E-mail: techsupport@fluidcomponents.com

RA #_____

Return Authorization Request

1. Return Customer Information

Returning Company's Name:_____ Phone# _____

Return Contact Name:_____ Fax # _____

Email Address: _____

2. Return Address

Bill To: _____ Ship To: _____

_____ _____

_____ _____

_____ _____

3. Mandatory End User Information

Contact: _____ Company: _____ Country: _____

4. Return Product Information

Model No: _____ Serial No(s):_____

Failure Symptoms *(Detailed Description Required)*: _____

_____

What Trouble Shooting Was Done Via Phone or Field Visit by FCI: _____

_____

FCI Factory Technical Service Contact: _____

5. Reason For Return

❑ Sensor Element ❑ Electronics ❑ As Found Testing ❑ Credit
❑ Recalibrate (New Data) ❑ Recalibrate (Most Recent Data) ❑ Other

(Note: A new Application Data Sheet (ADS) must be submitted for all recalibrations and re-certifications)

6. Payment Via ❑ Faxed Purchase Order ❑ VISA ❑ MasterCard

(Note: A priced quotation is provided for all Non-Warranty repairs after equipment has been evaluated. All Non-Warranty repairs are subject to a minimum evaluation charge of $250.00)

Factory Return Shipping Address:

Fluid Components International LLC
1755 La Costa Meadows Drive
San Marcos, CA 92078-5115
Attn: Repair Department
RA #_____

FLUID COMPONENTS INTERNATIONAL LLC

The following Return Authorization Request form and Decontamination Statement ***MUST be completed, signed and faxed back to FCI before*** a Return Authorization Number will be issued. The signed Decontamination Statement and applicable MSDS Sheets **must be included with the shipment**. FCI will either fax, email or telephone you with the Return Authorization Number upon receipt of the signed forms.

Packing Procedures

1. **Electronics** should be wrapped in an **anti-static** or **static-resistant** bag, then wrapped in protective bubble wrap and surrounded with appropriate dunnage* in a box. Instruments weighing **more than 50 lbs., or extending more than four feet**, should be secured in wooden crates by bolting the assemblies in place.
2. **The sensor head must be protected** with pvc tubing, or retracted the full length of the probe, locked and secured into the Packing Gland Assembly (cap screws tightened down).
3. FCI can supply crates for a nominal fee.
4. No more than **four (4)** small units packaged in each carton.
5. **FCI will not be held liable for damage caused during shipping.**
6. To ensure immediate processing **mark** the RA number on the outside of the box. Items without an RA number marked on the box or crate may be delayed.
7. Freight **must be "PrePaid"** to FCI receiving door.

* Approriate dunnage as defined by UPS, will protect package contents from a drop of 3 feet.

*** Decontamination Statement *** This Section Must Be Completed ***

Exposure to hazardous materials is regulated by Federal, State, County and City laws and regulations. These laws provide FCI's employees with the "Right to Know" the hazardous or toxic materials or substances in which they may come in contact while handling returned products. Consequently, FCI's employees must have access to data regarding the hazardous or toxic materials or substances the equipment has been exposed to while in a customer's possession. Prior to returning the instrument for evaluation/repair, FCI requires thorough compliance with these instructions. The signer of the Certificate must be either a knowledgeable Engineer, Safety Manager, Industrial Hygenist or of similar knowledge or training and responsible for the safe handling of the material to which the unit has been exposed. **Returns without a legitimate Certification of Decontamination, and/or MSDS when required, are unacceptable and shall be returned at the customer's expense and risk.** Properly executed Certifications of Decontamination must be provided before a repair authorization (RA) number will be issued.

Certification Of Decontamination

I certify that the returned item(s) has(have) been thoroughly and completely cleaned. If the returned item(s) has(have) been exposed to hazardous or toxic materials or substances, even though it (they) has (have) been thoroughly cleaned and decontaminated, the undersigned attests that the attached Material Data Safety Sheet(s) (MSDS) covers said materials or substances completely. Furthermore, I understand that this Certificate, and providing the MSDS, shall not waive our responsibility to provide a neutralized, decontaminated, and clean product for evaluation/repair at FCI. Cleanliness of a returned item or acceptability of the MSDS shall be at the sole discretion of FCI. **Any item returned which does not comply with this certification shall be returned to your location Freight Collect and at your risk.**

This certification must be signed by knowledgeable personnel responsible for maintaining or managing the safety program at your facility.

Process Flow Media _____

Product was or may have been exposed to the following substances:_____

Print Name_____

Authorized Signature_____ Date _____

Company Title _____

Visit FCI on the Worldwide Web: www.fluidcomponents.com
1755 La Costa Meadows Drive, San Marcos, California 92078-5115 USA ‡ Phone: 760-744-6950 ‡ 800-854-1993 ‡ Fax: 760-736-6250

FCI Document No. 05CS000004D [U]

WARRANTIES

Goods furnished by the Seller are to be within the limits and of the sizes published by the Seller and subject to the Seller's standard tolerances for variations. All items made by the Seller are inspected before shipment, and should any of said items prove defective due to faults in manufacture or performance under Seller approved applications, or fail to meet the written specifications accepted by the Seller, they will be replaced or repaired by Seller at no charge to Buyer provided return or notice of rejection of such material is made within a reasonable period but in no event longer than three (3) years for non-calibration defects and one (1) year for calibration defects from date of shipment to Buyer, and provided further, that an examination by Seller discloses to Seller's reasonable satisfaction that the defect is covered by this warranty and that the Buyer has not returned the equipment in a damaged condition due to Buyer's or Buyer's employees', agents', or representatives' negligence and Buyer has not tampered, modified, redesigned, misapplied, abused, or misused the goods as to cause the goods to fail. In addition, this warranty shall not cover damage caused by Buyer's exposure of the goods to corrosive or abrasive environments. Moreover, Seller shall in no event be responsible for (1) the cost or repair of any work done by Buyer on material furnished hereunder (unless specifically authorized in writing in each instance by Seller), (2) the cost or repair of any modifications added by a Distributor or a third party, (3) any consequential or incidental damages, losses, or expenses in connection with or by reason of the use of or inability to use goods purchased for any purpose, and Seller's liability shall be specifically limited to free replacement, or refund of the purchase price, at Seller's option, provided return or rejection of the goods is made consistent with this paragraph, and the Seller shall in no event be liable for transportation, installation, adjustment, loss of good will or profits, or other expenses which may arise in connection with such returned goods, or (4) the design of products or their suitability for the purpose for which they are intended or used. Should the Buyer receive defective goods as defined by this paragraph, the Buyer shall notify the Seller immediately, stating full particulars in support of his claim, and should the Seller agree to a return of the goods, the Buyer shall follow Seller's packaging and transportation directions explicitly. In no case are the goods to be returned without first obtaining a return authorization from the Seller. Any repair or replacement shall be at Seller's factory, unless otherwise directed, and shall be returned to Seller transportation prepaid by Buyer. If the returned goods shall prove defective under this clause they will be replaced or repaired by Seller at no charge to Buyer provided the return or rejection of such material is made within a reasonable period, but in no event longer than (1) year from the date of shipment of the returned goods or the unexpired terms of the original warranty period whichever is later. If the goods prove to be defective under this paragraph, the Buyer shall remove the goods immediately from the process and prepare the goods for shipment to Seller. Continued use or operation of defective goods is not warranted by Seller and damage occurring due to continued use or operation shall be for Buyer's account. Any description of the goods contained in this offer is for the sole purpose of identifying them, and any such description is not part of the basis of the bargain, and does not constitute a warranty that the goods will conform to that description. The use of any sample or model in connection with this offer is for illustrative purposes only, is not part of the basis of the bargain, and is not to be construed as a warranty that the goods will conform to the sample or model. No affirmation of that fact or promise made by the Seller, whether or not in this offer, will constitute a warranty that the goods will conform to the affirmation or promise. THIS WARRANTY IS EXPRESSLY IN LIEU OF ANY AND ALL OTHER EXPRESS OR IMPLIED WARRANTIES WITH RESPECT TO THE GOODS OR THEIR INSTALLATION, USE, OPERATION, REPLACEMENT OR REPAIR, INCLUDING ANY IMPLIED WARRANTY OF MERCHANTABILITY OR FITNESS OF PURPOSE; AND THE GOODS ARE BEING PURCHASED BY BUYER "AS IS". SELLER WILL NOT BE LIABLE BY VIRTUE OF THIS WARRANTY OR OTHERWISE FOR ANY SPECIAL, INCIDENTAL OR CONSEQUENTIAL LOSS OR DAMAGE RESULTING FROM THE USE OR LOSS OF USE OF THE GOODS.

NOTES

NOTES

FCI's Complete Customer Commitment. Worldwide
ISO 9001 and AS9100 Certified

Visit FCI on the Worldwide Web: www.fluidcomponents.com

FCI World Headquarters
1755 La Costa Meadows Drive | San Marcos, California 92078 USA | Phone: 760-744-6950 Toll Free (US): 800-854-1993 Fax: 760-736-6250

FCI Europe
Persephonestraat 3-01 | 5047 TT Tilburg, The Netherlands | Phone: 31-13-5159989 Fax: 31-13-5799036

FCI Measurement and Control Technology (Beijing) Co., LTD | www.fluidcomponents.cn
Room 107, Xianfeng Building II, No.7 Kaituo Road, Shangdi IT Industry Base, Haidian District | Beijing 100085, P. R. China
Phone: 86-10-82782381 Fax: 86-10-58851152